Physical Test Solutions

Innovative Solutions in Material Test Equipment

CONTENT

H

Rockwell Hardness Tester

R 01-26

Brinell Hardness Tester

B 01-10

Micro Vickers Hardness Tester

M 01-10

Vickers Hardness Tester

V 01-08

Ultrasonic Hardness Tester

U 01-28

Leeb Hardness Tester

L 01-16

Portable Hardness Tester

P 01-16

Accessories

A 17-18

R P1-22

Manual
Rockwell Hardness Tester / P 01-02

Electronic
Rockwell Hardness Tester / P 03-04

Touch Screen Digital
Rockwell Hardness Tester / P 05-06

Full-Auto
Rockwell Hardness Tester / P 07-12

Digital Universal
Hardness Tester / P 13-18

Extended Testing Nose Digital
Rockwell Hardness Tester / P 19-22

➢ **Rockwell Hardness Tester**

P 23-26 / Accessories

Application

- Rockwell B Scale HRB: Copper alloys, soft steels, aluminum alloys, malleable iron, etc.
- Rockwell C Scale HRC: Steel, hard cast irons, pearlitic malleable iron, titanium, deep case hardened steel, and other materials harder than 100HRB.
- Rockwell A Scale HRA: Cemented carbides, thin steel, and shallow case-hardened steel.

DigiRock HR1/HS1

Dial Gauge

Product Features

- DigiRock HR1/HS1 Analogue gauge resolution is 0.5HR, it is useful to improve the reading accuracy than traditional 1HR resolution.
- DigiRock HR1/HS1 force knob adopts the metal material to replace the plastic, it largely improves the instrument using-life.
- DigiRock HR1/HS1 loading, dwell and unloading is buffering by oil pump,it eliminates the operator' s tiredness.
- DigiRock HR1/HS1 intenter protector is available to improve the using lifetime of indenter.

Product Size

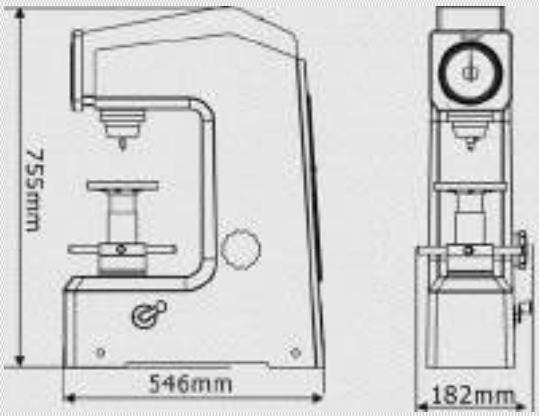

Specifications

Commodity		Manual Rockwell Hardness Tester	Manual Superficial Rockwell Hardness Tester
Model		DigiRock HR1	DigiRock HS1
Code#		811-110	811-210
Rockwell Scales		HRA, HRB, HRC	HR15N, HR30N, HR45N, HR15T, HR30T, HR45T
Preliminary Test Force	Kgf	10	3
	N	98.07	29.42
Test Force	Kgf	60, 100, 150	15, 30, 45
	N	558.4, 980.7, 1471	147.1, 294.2, 441.3
Hardness Indication		Analogue Display	
Dwell Time		Adjustable 1-60s	
Resolution		0.5HR	
Loading Control		Manual	
Max Height of Specimen		175mm	
Instrument Throat		165mm	
Dimension		(546*182*755)mm	
Packing Dimension		(620*460*870)mm	
Gross/Net Weight		110Kg/90Kg	

Accessories

Indenter protective sleeve
(#811-491)
(Optional Accessories)

Hardness Indenter

Partial Display

Dial Gauge

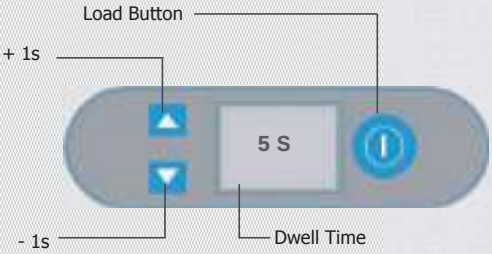

Control Button

Product Features

- DigiRock MR2/MS2 analogue gauge resolution is 0.5HR, it is useful to improve the reading accuracy than traditional 1HR resolution.
- DigiRock MR2/MS2 dwell time from 1 to 60s can be setup by the "time key" on the panel , it is much convenient than the setup on the manual hardness tester.
- DigiRock MR2/MS2 force knob adopts the metal material to replace the plastic, it largely improves the instrument using-life.
- DigiRock MR2/MS2 loading, dwell and unloading is buffering by electronic motor automatically,
- DigiRock MR2/MS2 doesn't need the operator to handle it , it eliminates the human operation error maximally.
- DigiRock MR2/MS2 intenter protector is available to improve the using lifetime of indenter.

Product Size

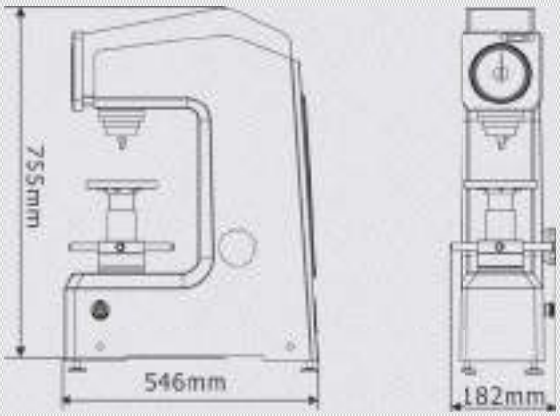

Specifications

Commodity		Electronic Rockwell Hardness Tester	Electronic Superficial Rockwell Hardness Tester	Electronic Twin Rockwell Hardness Tester
Model		DigiRock MR2	DigiRock MS2	DigiRock SR2
Code#		811-120	811-220	811-310
Rockwell Scales		HRA, HRB, HRC	HR15N, HR30N, HR45N, HR15T, HR30T, HR45T	HRA, HRB, HRC, HRD, HRE, HRF, HRG, HRH, HRK, HRL, HRM, HRP, HRR, HRS, HRV; 15T, 30T, 45T; 15T, 30T, 45T; 15N, 30N, 45N
Preliminary Test Force	Kgf	10	3	3,10
	N	98.07	29.42	29.42, 98.07
Test Force	Kgf	60, 100, 150	15, 30, 45	15, 30, 45, 60, 100, 150
	N	558.4, 980.7, 1471	147.1, 294.2, 441.3	147.1, 294.2, 441.3, 558.4, 980.7, 1471
Hardness Indication		Analogue Display		
Dwell Time		Adjustable 1-60s		
Resolution		0.5HR		
Loading Control		Electronic		
Max Height of Specimen		175mm		
Instrument Throat		165mm		
Dimension		(546*182*755)mm		
Packing Dimension		(620*460*870)mm		
Gross/Net Weight		110Kg/90Kg		

Partial Display

Application

- Rockwell B Scale HRB: Copper alloys, soft steels, aluminum alloys, malleable iron, etc.
- Rockwell C Scale HRC: Steel, hard cast irons, pearlitic malleable iron, titanium, deep case hardened steel, and other materials harder than B100.
- Rockwell A Scale HRA: Cemented carbides, thin steel, and shallow case-hardened steel.

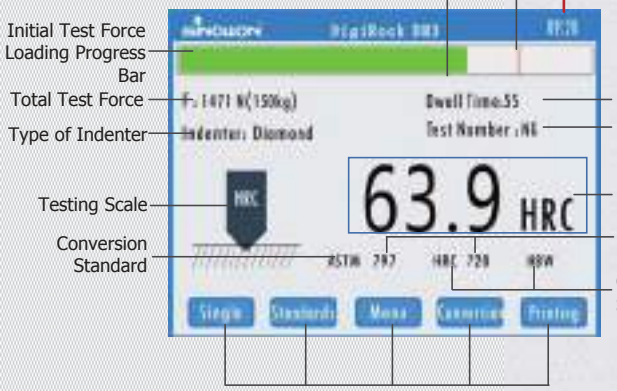

Touch Screen Operation

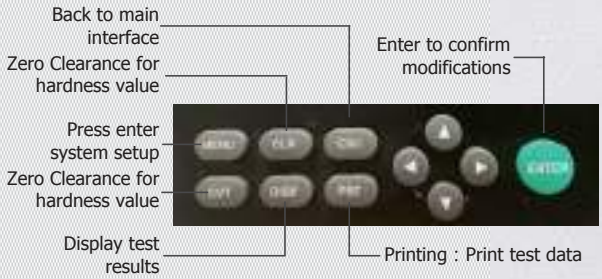

Control Panel

Product Features

- Half automatic hardness tester except for loading preliminary force and adjusting force knob. Operation is very convenient and fast.
- Color touch screen, displays loading force, indenter type, dwell time, and conversion scale.
- Motorized control of loading, dwell and unloading, eliminates error by manual operation.
- Built-in micro processor auto compute max, min, mean and deviation value, resolution is 0.1HR, largely improving accuracy.
- Auto hardness conversion to other scales, no need to check conversion table, therefore improving working efficiency.
- Support multiple languages, English, Turkish, German, etc. Convenient for local customers operation.
- Save 2000 single testing results and 1000 group results for reviewing and analysis.
- Optional blue tooth mini printer is available.

Product Size

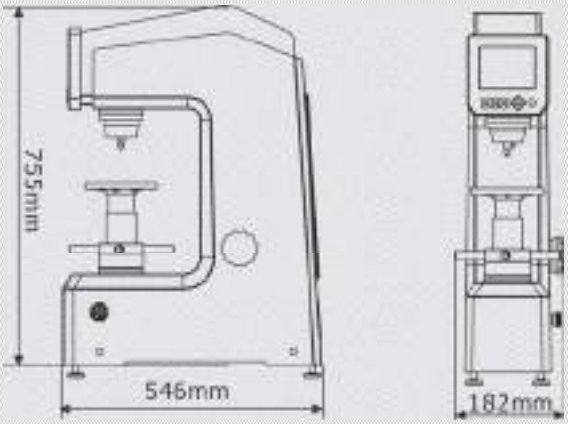

Specifications

Commodity		Touch Screen Digital Rockwell Hardness Tester	Touch Screen Digital Superficial Rockwell Hardness Tester
Model		DigiRock DR3	DigiRock DS3
Code#		811-130	811-230
Rockwell Scales		HRA, HRB, HRC	HR15N, HR30N, HR45N, HR15T, HR30T, HR45T
Preliminary Test Force	Kgf	10	3
	N	98.07	29.42
Test Force	Kgf	60, 100, 150	15, 30, 45
	N	558.4, 980.7, 1471	147.1, 294.2, 441.3
Dwell Time		Adjustable 1-60s	
Display		5.2 ″Color touch screen; Resolution: 640*480	
Resolution		0.1HR	
Loading Control		Auto loading/dwell/unloading	
Language		Chinese, English, German, Portuguese, Turkish, Czech, Korean	
Hardness Conversion		HRC, HV, HBS, HBW, HK, HRA, HRD, HR15N, HR30N, HR45N, HS, HRF, HR15T, HR30T, HR45T, HRB	
Conversion Standard		ASTM, DIN	
Correction Range		-3.0HR ~ +3.0HR, Step value 0.1HR	
Data Memory		2000 group single dat, line chart of group data function; Respectively provide single data viewing and group data viewing	
Print		Optional wireless printer	
Max Height of Specimen		175mm	
Instrument Throat		165mm	
Dimension		(546*182*755)mm	
Packing Dimension		(620*460*870)mm	
Gross/Net Weight		110Kg/90Kg	

Accessories

Wireless Printe
(#811-361)
(Optional Accessories)

Bluetooth Receiver
(#811-710)
(Optional Accessories)

Bubble Level Meter
(#811-931)
(Optional Accessories)

SPC Software
(#811-381)
(Optional Accessories)

Partial Display

Large LCD Display

Print Function

One-key operation

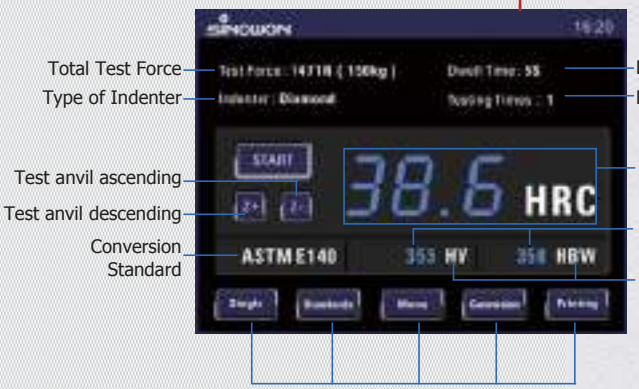

Touch Screen Operation

Product Size

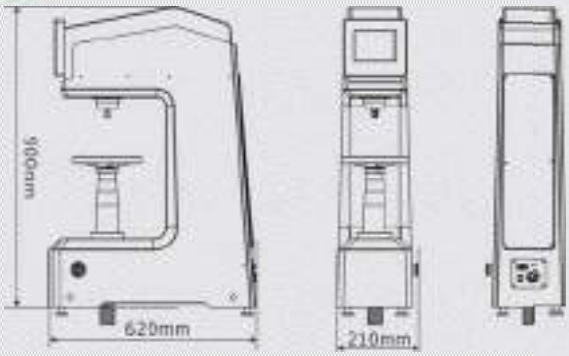

Product Features

- A kind of Full-auto Intelligent Digital Rockwell Hardness Tester, available to test Rockwell and Superficial Rockwell hardness automatically.
- One-key operation, auto lifting, auto load-change, auto loading/dwell/unloading,auto conversion, auto testing.
- Equipped with friendly operation interface, 5.2 " color touch screen directly display test force, dwell time, conversion value, indenter type, etc.
- Auto calculating and displaying test result, Max, Min, Ave, and hardness deviation.
- Available to set up upper and lower limit, with the function of over-error warning, data analysis chart, single test and group test.
- With software compensation function, available to compensate ±3HR, need not mechanical adjustment.
- With function of auto conversion according to ASTM E140, without checking hardness contrast table.
- Multi-language features, can switch Chinese, English and other languages.
- Available to save 2000 single test results and 1000 group test results.
- With optional wireless Bluetooth printer, there is no need to record results and report by hand.
- With optional data analysis software and Bluetooth receiver to input and analyze data.
- Support FexQMS data analysis and control software, improve integral control and decrease material consumption.

Specifications

Commodity		Full-auto Rockwell Hardness Tester	Full-auto Twin Rockwell Hardness Tester
Model		iRock-DR1	iRock-TR1
Code#		811-330	811-350
Preliminary Test Force	Kgf	10	3, 10
	N	98.07	29.42, 98.07
Test Force	Kgf	60, 100, 150	15, 30, 45, 60, 100, 150
	N	558.4, 980.7, 1471	147.1, 294.2, 441.3, 558.4, 980.7, 1471
Rockwell Scales		HRA, HRB, HRC, HRD, HRE, HRF, HRG, HRH, HRK, HRL, HRM, HRP, HRR, HRS, HRV	
Full Rockwell Scale		HRA, HRB, HRC, HRD, HRE, HRF, HRG, HRH, HRK, HRL, HRM, HRP, HRR, HRS, HRV; 15T, 30T, 45T; 15T, 30T, 45T; 15N, 30N, 45N	
Dwell Time		Adjustable 1-60s	
Display		5.2 ”Color touch screen; Resolution: 640*480	
Software Correction		-3.0HR ~ +3.0HR, Step value 0.1HR	
Resolution		0.1HR	
Loading Control		Auto loading/dwell/unloading	
Conversion Scale		HRC, HRB, HRA, HV, HK, HBW, etc	
Conversion Standard		ASTM、DIN	
Language		Chinese, English, German, Portuguese, Turkish, Czech, Korean	
Data Processing		2000 group single dat, line chart of group data function; Respectively provide single data viewing and group data viewing	
Print		Optional wireless printer	
Max Height of Specimen		280mm	
Instrument Throat		170mm	
Power Supply		AC220V/50Hz; AC110V/60Hz	
Dimension		(620*210*900)mm	
Packing Dimension		(710*530*1000)mm	
Gross/Net Weight		143Kg/125Kg	

Partial Display

Large LCD Display

Print Function

Semi-automatic

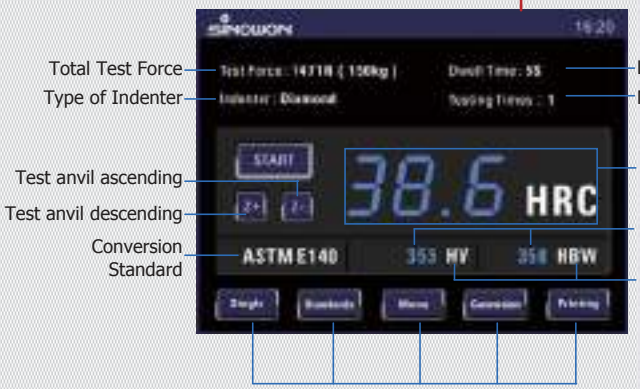

Touch Screen Operation

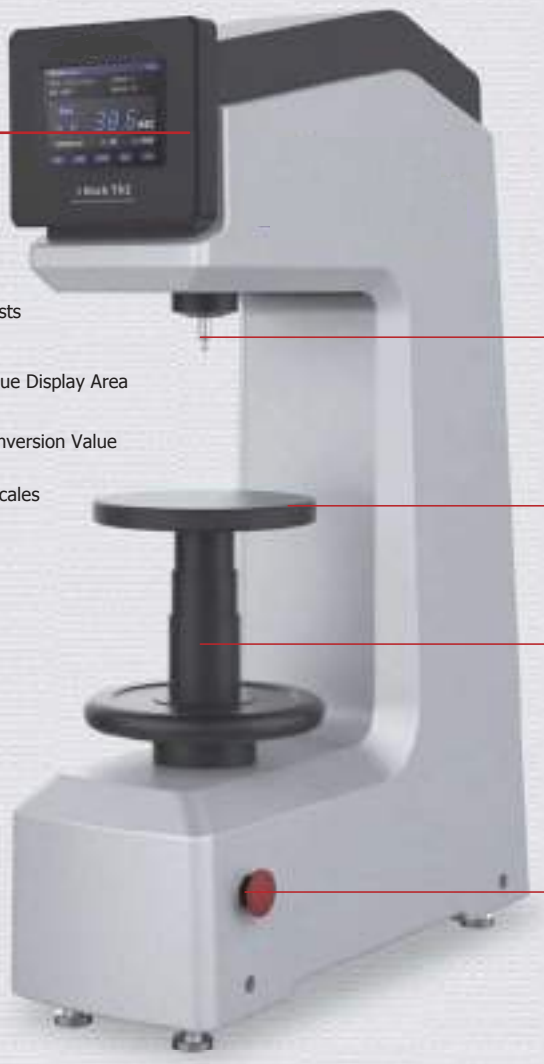

Product Size

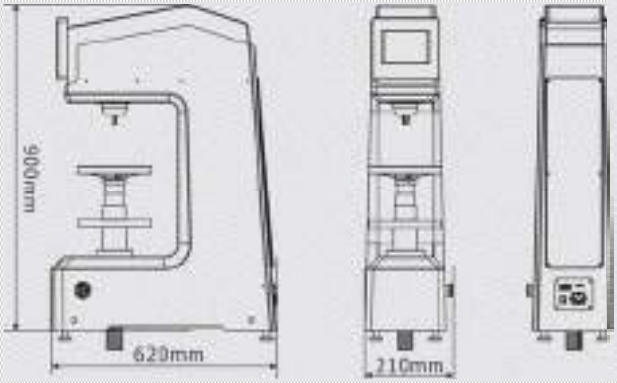

Product Features

- Semi-automatic intelligent Digital Rockwell Hardness tester;
- Automatic variable load, automatic loading, automatic unloading, automatic conversion, automatic measurement;
- Friendly human-computer interaction, 5.2 "colorful LCD screen direct display test force,loading time,conversion value and indenter type etc;
- Automatically calculate and display the measured value, the maximum value, the minimum value, the average value and the hardness value deviation, the display shows the resolution 0.1HR;
- There are functions such as hardness upper and lower limit settings, tolerance alarms, data graph analysis, average and (single point) batch measurement modes ;
- Software compensation function, the machine can be ± 3HR software compensation, no need to open the top cover for mechanical adjustment;
- With automatic hardness conversion function, according to ASTM E140 conversion, no need to check the complex hardness of the table;
- Multi-language features, can switch Chinese, English and other languages;
- Built-in 2000 single data storage function and 1000 group packet data storage function, can view a single data and data analysis;
- Optional Bluetooth wireless printer to print the measurement data;
- Optional Softhard data analysis software and Bluetooth receiver on the test data for the computer into and analysis;
- Support FexQMS measurement of large data analysis and control software to enhance the whole plant process control, reduce material loss.

Specifications

Commodity		Heighten Rockwell Hardness Tester	Heighten Twin Rockwell Hardness Tester
Model		iRock-DR2	iRock-TR2
Code#		811-380	811-360
Preliminary Test Force	Kgf	10	3, 10
	N	98.07	29.42, 98.07
Test Force	Kgf	60, 100, 150	15, 30, 45, 60, 100, 150
	N	558.4, 980.7, 1471	147.1, 294.2, 441.3, 558.4, 980.7, 1471
Rockwell Scales		HRA, HRB, HRC, HRD, HRE, HRF, HRG, HRH, HRK, HRL, HRM, HRP, HRR, HRS, HRV	
Full Rockwell Scale		HRA, HRB, HRC, HRD, HRE, HRF, HRG, HRH, HRK,HRL, HRM, HRP, HRR, HRS, HRV; 15T, 30T, 45T; 15T, 30T, 45T; 15N, 30N, 45N	
Dwell Time		Adjustable 1-60s	
Display		5.2 ″ Color touch screen; Resolution: 640*480	
Resolution		0.1HR	
Loading Control		Auto loading/dwell/unloading	
Conversion Scale		HRC, HRB, HRA, HV, HK, HBW, etc	
Language		Chinese, English, German, Portuguese, Turkish, Czech, Korean	
Software Correction		-3.0HR ~ +3.0HR, step value 0.1HR	
Data Processing		2000 group single dat, line chart of group data function; Respectively provide single data viewing and group data viewing	
Print		Optional wireless printer	
Max Height of Specimen		240mm	
Instrument Throat		170mm	
Power Supply		AC220V/50Hz; AC110V/60Hz	
Dimension		(615*225*885)mm	
Packing Dimension		(670*440*1000)mm	
Gross/Net Weight		120Kg/140Kg	

Partial Display

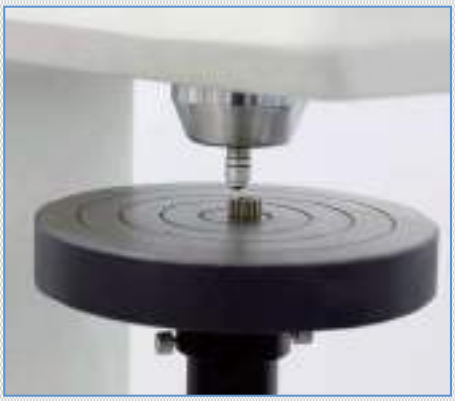

Product Features

- Test the Rockwell hardness of ferrous metals, non-ferrous metals and non-metallic materials;
- Test the hardness of plastics, composite materials and various friction materials, soft metals, non-metallic materials, etc.;
- Test the surface Rockwell hardness of ferrous metal, alloy steel, hard alloy and metal surface treatment (carburizing, nitriding, electroplating).

Product Features

- The automatic Rockwell hardness tester (machine head mobile type) realizes the fully automatic control of the hardness testing process, and the loading system adopts a high-precision force sensor and a central controller to form a closed loop to achieve accurate control of the test force. The bathymetry system uses a high-precision displacement sensor, which allows a hardness value resolution of 0.1 HR to be obtained.
- The equipment stage is fixed, and the hardness test is carried out by the indenter moving up and down, and the fixed test bench can eliminate the coaxiality error caused by the upward and downward rotation of the traditional lead screw, which improves the test accuracy and repeatability while increasing the stability and work efficiency of the hardness tester.
- Adopt high-speed precision precision walking control system to achieve high-precision rapid testing;
- New design, head mobile structure, using high-precision guide rail to control the precise movement of the head;
- High-definition LCD touch screen operation, menu-type operation interface, intuitive display, simple operation;
- Configure a wireless printer to facilitate the printing and saving of test results.

Specifications

Commodity	Full-Auto Twin Rockwell Hardness Tester
Model	DigiRock TR7
Code #	811-369
Preliminary Test Force	3Kgf(29.4N), 10Kgf(98.1N)
Total Test Force	15Kgf(147.1N), 30Kgf(294.3N), 45Kgf(441.3N); 60Kgf(588.4N), 100Kgf(980.7N), 150Kgf(1471N)
Indenter	Cone Diamond Indenter, Ø1.588mmBall Indenter
Rockwell Scales	HRA, HRB, HRC, HRD, HRE, HRF, HRG, HRH, HRK, HRL, HRM, HRP, HRR, HRS, HRV
Superficial Rockwell Scales	HR15N, HR30N, HR45N, HR15T, HR30T, HR45T, HR15W, HR30W, HR45W, HR15X, HR30X, HR45X, HR15Y, HR30Y, HR45Y
Tolerance Judgment	GO/NG
Displace	LCD Touch Screen
Data Output	Built-in Bluetooth, RS-232 interface, USB interface
Conversion	HRA, HRB, HRC, HRD, HRF, HV, HK, HBW, HBS, HR15N, HR30N, HR45N, HR15T, HR30T, HR45T
Max. Height of Specimen	280mm
Throat	170mm
Power Supply	AC220V/50Hz
Dimension	(400*855*620) mm

Partial Display

Dial Gauge

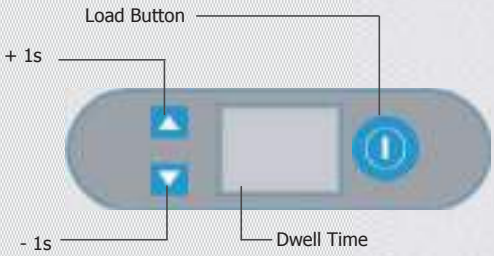

Control Button

Product Features

- DigiRock BRV2 is a universal hardness testing instrument for the measurement of Brinell, Rockwell and Vickers scale.
- DigiRock BRV2 is equipped 7-testing-foce and 5-indenter, it is universal to measure a lot of material.
- DigiRock BRV2 dwell time from 1 to 60S can be setup by the "time key" on the panel, it is much convenient than the setup on the manual hardness tester.
- DigiRock BRV2 force knob adopts the metal material to replace the plastic, it improves the instrument using-life greatly.
- DigiRock BRV2 loading, dwell and unloading is driven by electronic motor automatically, doesn' t need the operator to handle it, it eliminates the human operating error maximally.

Product Size

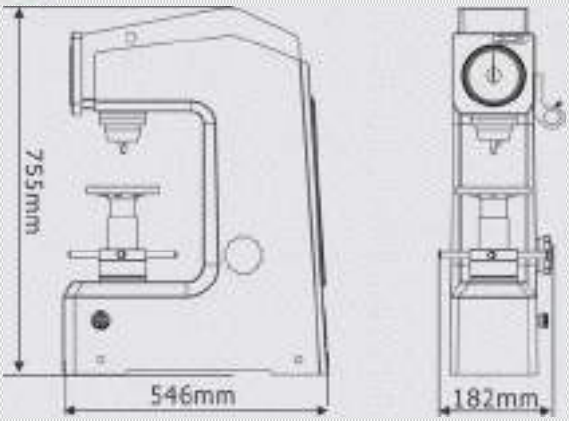

Specifications

Commodity		Electronic Universal Hardness Tester
Model		DigiRock BRV2
Code#		811-140
Rockwell Scales		HRA, HRB, HRC
Rockwell Testing Force	Kgf	60, 100, 150
	N	558.4, 980.7, 1471
Brinell Scales		HBW2.5/31.25, HBW2.5/62.5, HBW5/62.5, HBW2.5/187.5
Brinell Testing Force	Kgf	31.25, 62.5, 187.5
	N	306.5, 612.9, 1839
Vickers Scales		HV30, HV100
Vickers Testing Force	Kgf	30, 100
	N	294.2, 980.7
Dwell Time		Adjustable 2-60s
Rockwell Hardness Indication		Analogue Display
Resolution		0.5HR
Magnification of Microscope		Brinell:50x; Vickers:100x
Loading Control		Electronic
Max Height of Specimen		175mm
Instrument Throat		165mm
Dimension		(546*182*755)mm
Packing Dimension		(620*460*870)mm
Power Supply		AC 220V/50Hz; AC110V/60Hz
Gross/Net Weight		120Kg/90Kg

Micrometer Bracke

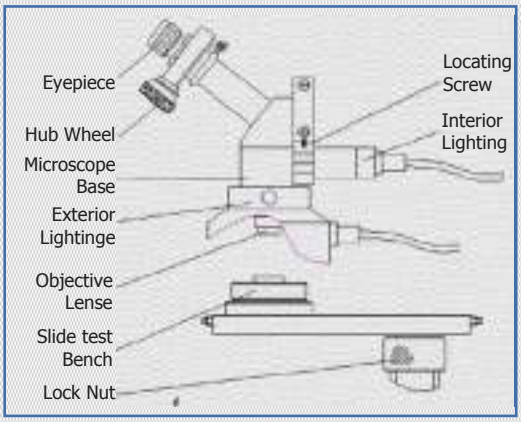

Partial Display

Product Application

- Rockwell B Scale HRB: Copper alloys, soft steels, aluminum alloys, malleable iron, etc.
- Rockwell C Scale HRC: Steel, hard cast irons, pearlitic malleable iron, titanium, deep case hardened steel, and other materials harder than B100.
- Rockwell A Scale HRA: Cemented carbides, thin steel, and shallow case-hardened steel.

Large LCD Display

Print Function

Function Introduction of Panel Keys

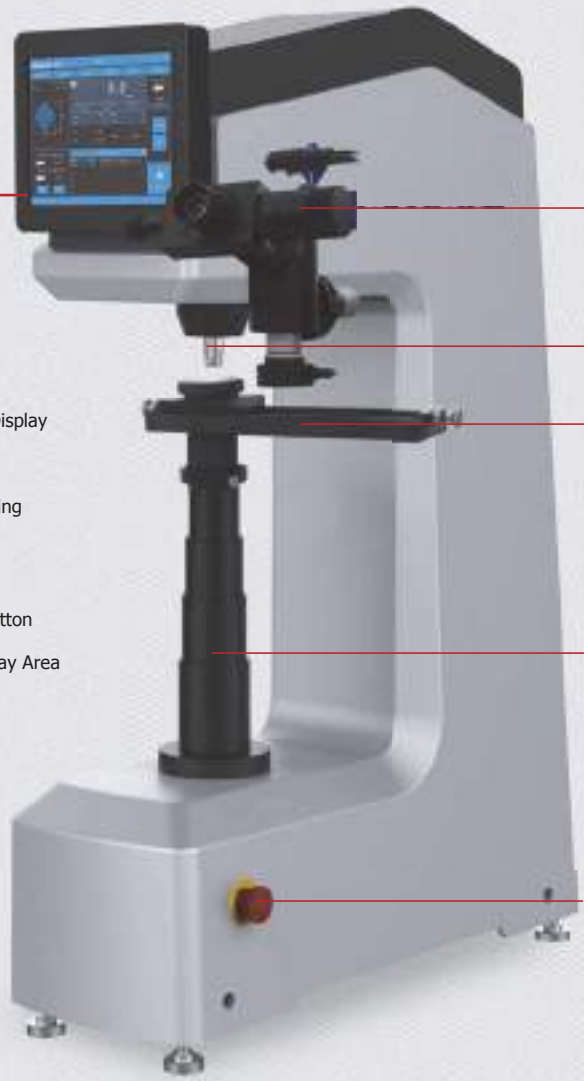

Product Features

- DigiRock BRV3 is a universal hardness testing instrument for the measurement of Brinell, Rockwell and Vickers scale;
- DigiRock BRV3 is equipped 7-testing-foce and 5-indenter, it is universal to measure most of metal material;
- DigiRock BRV3 dwell time from 2 to 60S can be setup on LCD panel, it is much convenient than the setup on the manual hardness tester;
- DigiRock BRV3 loading ,dwell and unloading is driven by electronic motor automatically , doesn' t need the operator to handle it, it eliminates the human operating error maximum;
- DigiRock BRV3 doesn' t need the operator to read and check the hardness scale table ,it will compute and display the testing result once press the key of digital length sensor.

Product Size

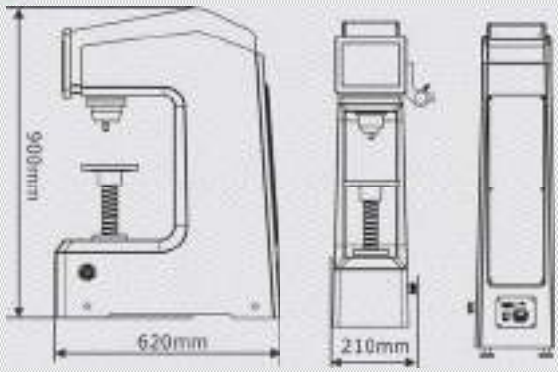

Specifications

Commodity		Digital Universal Hardness Tester
Model		DigiRock BRV3
Code#		811-160
Rockwell Scales		HRA, HRB, HRC,
Rockwell Testing Force	Kgf	60, 100, 150
	N	558.4, 980.7, 1471
Brinell Scales		HBW2.5/31.25, HBW2.5/62.5, HBW5/62.5, HBW2.5/187.5
Brinell Testing Force	Kgf	31.25,62.5,187.5
	N	306.5, 612.9, 1839
Vickers Scales		HV30, HV100
Vickers Testing Force	Kgf	30, 100
	N	294.2, 980.7
Dwell Time		Adjustable 2~60s
Rockwell Hardness Indication		Digital LCD display
Resolution		0.1HR
Magnification of Microscope		Brinell:50X; Vickers:100X
Loading Control		Automatic
Data Output		RS-232/Printer
Hardness Conversion		HV, HK, HBW, etc
Max Height of Specimen		240mm
Instrument Throat		170mm
Dimension		620x210x900mm
Packing Dimension		710x530x1000mm
Power Supply		AC 220V/50Hz; AC110V/60Hz
Gross/Net Weight		143Kg/125Kg

Micrometer Bracke

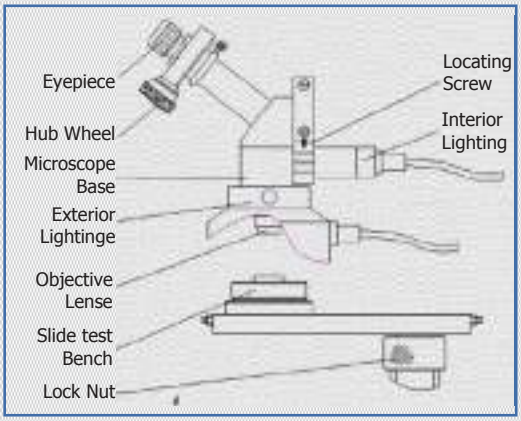

Partial Display

Product Features

- DigiRock BRV5 universal hardness tester adopts a Close-loop Load Cell System. The closed-loop pressure sensor and force feedback system provides a computer-controlled force loading system to ensure that the test is carried out at an extremely fast cycle speed while obtaining very accurate GR&Rresult.
- DigiRock BRV5 overall casting of the fuselage guarantees stiffness without deformation and long-term stability. Wide casting base, high stability.
- DigiRock BRV5 with automatically control system, control accuracy of 0.5%; loading, holding and unloading are precisely controlled by computer.
- English and Chinese bilingual menu, large screen, high definition, high brightness backlit dot matrix LCD display.
- HB, HV, HLD, HK hardness conversion and tensile strength conversion.
- With USB-2 (3), RS-232 converter, RJ-45 - LAN, WLAN, Wi-Fi, Bluetooth transfer functions, measurement data EXCEL output.
- Strong data processing function: test time, serial number, and test results are automatically stored, and can be called at any time to consult and print, without being changed or deleted. Monitor test history effectively to ensure the objectivity and fairness of historical data.

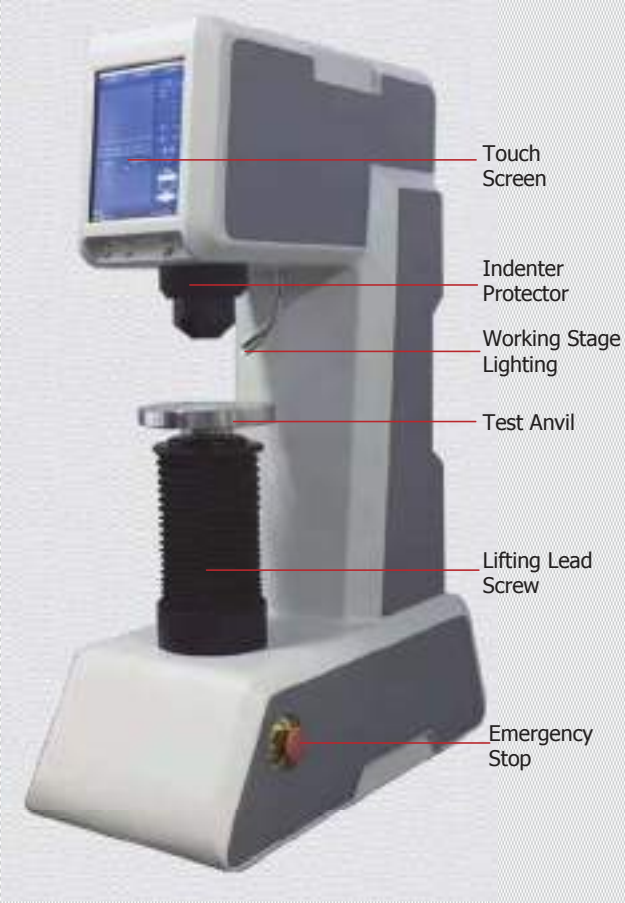

Specifications

Commodity	Digital Universal Hardness Tester
Model	DigiRock BRV5
Code#	811-178
Measuring Range	Rockwell, Superficial Rockwell, HVT, HBT, Ball indentation method
Rockwell Scales	HRA, HRB, HRC, HRD, HRE, HRF, HRG, HRH, HRK, HRL, HRM, HRP, HRR, HRS, HRV
Superficial Rockwell Scale	15N, 30N, 45N, 15T, 30T, 45T, 15W, 30W, 45W, 15X, 30X, 45X, 15Y, 30Y, 45Y
Test Force	15kgf, 30kgf, 45kgf, 60kgf, 100kgf, 150kgf
Preliminary Test Force	3kgf, 10kgf
*HVTScales	HV5, HV10, HV20, HV30, HV50, HV100, HV120
*HBTScales	HBT1/5kgf, HBT1/10kgf, HBT1/30kgf; HBT2.5/6.25kgf, HBT2.5/15.625kgf, HBT2.5/31.25kgf, HBT2.5/62.5kgf, HBT2.5/187.5kgf; HBT5/25kgf, HBT5/31.25kgf, HBT5/62.5kgf, HBT5/125kgf, HBT5/250kgf; HBT10/100kgf, HBT10/125kgf, HBT10/250kgf
Loading System	Force sensor, force feedback control, closed-loop system
Load Accuracy	≤±0.5%
Sounding Accuracy	≤0.1um
Sounding Resolution	0.02um
Dwelling Time	1-250 seconds, adjustable in units of 1 second
* Z-axis Lifting Mode	Electric(automatic)lifting
Software System	Embedded integrated MS Windows® operating system, HD SPIRIT hardness testing software,32Gb solid state drive
Display and Operation	8 inch color industrial touch screen, display test results and statistical analysis values, can be operated by mouse and keyboard;with shortcut buttons including: measurement start button, end measurement button, menu selection button
Display	Hardness conversion, such as Brinell, Vickers, Richter, UTM, convex and concave corrections, instrument setup, calibration
Test Space	Maximum height 300mm, maximum throat depth 200mm
Max. weight of Specimen	150kg
Dimension(LxWxH)	(300*875*1068) mm
Net Weight	95kg

DigiRock BRV6

Product Features

- DigiRock BRV6 universal hardness tester adopts a Close-loop Load Cell System. The closed-loop pressure sensor and force feedback system provides a computer-controlled force loading system to ensure that the test is carried out at an extremely fast cycle speed while obtaining very accurate GR&R. result.
- DigiRock BRV6 can perform hardness testing methods, including Rockwell, Superficial Rockwell, Brinell, Vickers and Knoop. Ball indentation hardness testing of thermoplastics is also available, as well as new Vickers depth (HVT) and Brinell depth (HBT) testing.
- DigiRock BRV6 with advanced hardness testing software that can automatically control the testing procedure, such as fully automatic indentation measurement and data storage, embedded camera and image calibration zoom function, can effectively avoid operator error and ensure Vickers or Brinell testing efficiency and accuracy.

Specifications

Commodity		Digital Optical Universal Hardness Tester	
Model		DigiRock BRV6M	DigiRock BRV6F
Code#		811-188M	811-188F
FocusingMethod		Manual	Automatic
Testing Range		Brine(HB), Vickers(HV), Rockwell(HR), Superficial Rockwell, Knoop(HK), Vickers depth (HVT), Brinell depth (HBT), ball indentation	
Rockwell Testing Force	Kgf	3,10,15,30,45,60,100,150	
	N	29.4,98,147.1,294.2,441.3,558.4,980.7,1471	
Brinell Testing Force	Kgf	HB1: 1,2.5,5,10,30; HB2.5: 6.25,15.625,31.25,62.5,187.5; HB5: 25,62.5,125,250; HB10: 100,250; HBT: 5,250	
	N	HB1: 9.8,24.5,49,98,294.2; HB2.5: 61.29,153.2,306.45,612.9,1838; HB5: 245.16,612.9,1225,2450; HB10: 980.7,2450; HBT: 49,2450	
Vickers Testing Force	Kgf	HV: 1,2,3,4,5,10,20,30,50,100,120; HVT: 50,100	
	N	HV: 9.8,19.6,29.4,39.2,49,98,196.13,294.2,490,980.7,1176; HVT: 490,980.7	
Rockwell Scales		HRA, HRB, HRC, HRD, HRE, HRF, HRG, HRH, HRK, HRL, HRM, HRP, HRR, HRS, HRV	
Superficial Rockwell Scale		15N, 30N, 45N, 15T, 30T, 45T, 15W, 30W, 45W, 15X, 30X, 45X, 15Y, 30Y, 45Y	
Loading Control System		Electronic Close-loop Load Cell System	
Software system		Embedded integrated MS Windows® operating systemwith hardness testing software	
Optical System		Objectives: 5x, 10x	
		5MP high definition camera, indentation image zoom function	
Display		High resolution embedded industrial LCD touch screen	
Testing Space		Maximum height: 300mm; Maximum throat depth:150mm	
Machine Dimensions (WxDxH)		(230* 540*1065)mm	
Weight		178kg	

Product Size

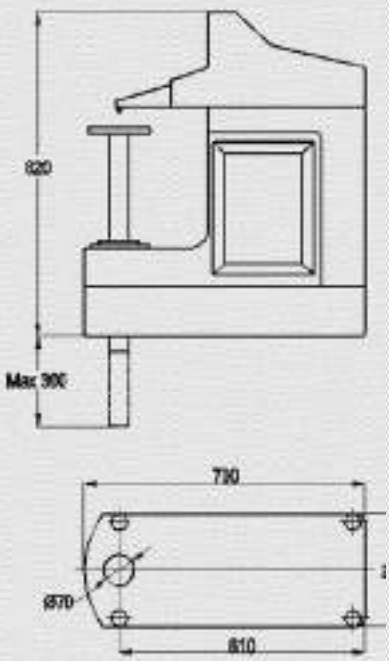

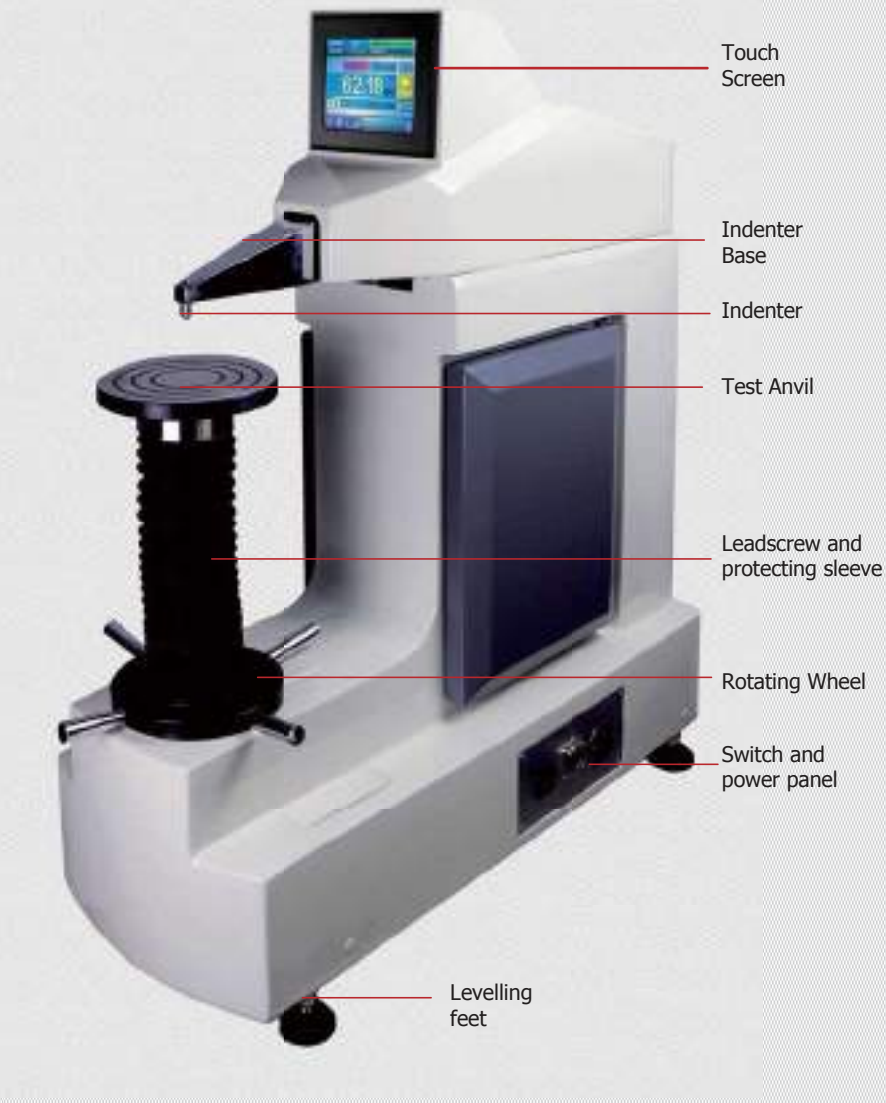

Product Features

- The test force are applied via a closed-loop control unit with a load cell, a DC motor and an electronic measurement and control unit replace traditional dead weights. The result is highly accurate measurements at all test loads up to 0.5%.
- Simple plug - and - play tech allows for much more quick and easy installation than traditional weights type machine.
- Manual handle wheel pre-load. Automatic main-load and testing cycle.
- Extended dolphin nose allows verticaltest height of 300mm and throat depth of 220mm.
- Integrated casting body with more wide basement leads to permanent stability.
- RS232 and USB port to PC.
- Twin tester--Regular Rockwell & Rockwell Superficial hardness for metal and plastic material.
- Horizontal dolphin nose Indenter is suitable also for internal and external testing.
- Testing on Surfaces that is difficult to reach.Testing internal surface of rings and tubes.
- Provided with many features such as high measuring precision, wide measuring range with 30 Rockwell scales.
- The tester is suitable for testing of carbon steel, alloy steel, cast iron, non ferrous metal.
- Automatic testing cycle: Lifting of part, pre-loading, loading, dwell, unloading, results will be finished automatically.
- Measuring results digitally displaying and can be printed, or transmitted to external computer automatically by USB port.
- Test HR value can be converted to the value of HB, HV, HK and σb value.
- The tester meets all the following standard such as ISO 6508-2, ASTM E18.

Specifications

Commodity		Rockwell Hardness Tester	Superficial Rockwell Hardness Tester	Twin Rockwell Hardness Tester
Model		DigiRock DR5	DigiRock DS5	DigiRock TR5
Code#		811-108	811-118	811-128
Preliminary Test Force	Kgf	10	3	3,10
	N	98.07	29.42	29.42, 98.07
Test Force	Kgf	60, 100, 150	15, 30, 45	15, 30, 45, 60, 100, 150
	N	558.4, 980.7, 1471	147.1, 294.2, 441.3	147.1, 294.2, 441.3, 558.4, 980.7, 1471
Rockwell Scales		HRA, HRB, HRC, HRD, HRE, HRF, HRG, HRH, HRK, HRL, HRM, HRP, HRR, HRS, HRV		
Superficial Rockwell Scale		HR15N, HR30N, HR45N, HR15T, HR30T, HR45T, HR15W, HR30W, HR45W, HR15X, HR30X, HR45X, HR15Y, HR30Y, HR45Y		
Full Rockwell Scale		HRA, HRB, HRC, HRD, HRE, HRF, HRG, HRH, HRK, HRL, HRM, HRP, HRR, HRS, HRV, HR15N, HR30N, HR45N, HR15T, HR30T, HR45T, HR15W, HR30W, HR45W, HR15X, HR30X, HR45X, HR15Y, HR30Y, HR45Y		
Resolution		0.1HR		
Dwell Time		2 ~ 50s, can be set and stored		
Data Processing		5000 sets of measurement data, test time and test serial number are automatically stored		
Language		Chinese, English		
Testing Capacity		300mm (vertical), 220mm (horizontal)		
Power Supply		220V/110V, 50Hz, 4A		
Dimension		(690*280*860)mm		
Weight		88Kg		

Partial Display

Product Features

- The test force are applied via a closed-loop control unit with a load cell, a DC motor and an electronic measurement and control unit replace traditional dead weights. The result is highly accurate measurements at all test loads up to 0.5%.
- Simple plug - and - play tech allows for much more quick and easy installation than traditional weights type machine.
- Automated Z-Axis. Just press START key once, entire test process will be finished automatically. Regardless of the the size of the sample, the position of the sample, the distance between the indenter and sample surface. The sample will be auto-lifted to approach the indenter and finishing testing automatically.
- Higher precision than handle wheel lifting/dead weights type machines which can be affected by user interaction.
- Integrated casting body with more wide basement leads to permanent stability.
- Built in micro-printer and USB port to PC.
- Horizontal dolphin nose Indenter is suitable also for internal and external testing.
- Testing on Surfaces that is difficult to reach. Testing internal surface of rings and tubes.
- Provided with many features such as high measuring precision, wide measuring range with 30 Rockwell scales.
- The tester is suitable for testing of carbon steel, alloy steel, cast iron, non ferrous metal.
- Automatic testing cycle: Lifting of part, pre-loading, loading, dwell, unloading, results will be finished automatically.
- Measuring results digitally displaying and can be printed, or transmitted to external computer automatically by USB port.

Specifications

Commodity		Rockwell Hardness Tester	Superficial RockwellHardness Tester	Twin Rockwell Hardness Tester
Model		DigiRock DR6	DigiRock DS6	DigiRock TR6
Code#		811-138	811-148	811-158
Preliminary Test Force	Kgf	10	3	3, 10
	N	98.07	29.42	29.42, 98.07
Test Force	Kgf	60, 100, 150	15, 30, 45	15, 30, 45, 60, 100, 150
	N	558.4, 980.7, 1471	147.1, 294.2, 441.3	147.1, 294.2, 441.3, 558.4, 980.7, 1471
Rockwell Scales		HRA, HRB, HRC, HRD, HRE, HRF, HRG, HRH, HRK, HRL, HRM, HRP, HRR, HRS, HRV		
Superficial Rockwell Scale		HR15N, HR30N, HR45N, HR15T, HR30T, HR45T, HR15W, HR30W, HR45W, HR15X, HR30X, HR45X, HR15Y, HR30Y, HR45Y		
Full Rockwell Scale		HRA, HRB, HRC, HRD, HRE, HRF, HRG, HRH, HRK, HRL, HRM, HRP, HRR, HRS, HRV, HR15N, HR30N, HR45N, HR15T, HR30T, HR45T, HR15W, HR30W, HR45W, HR15X, HR30X, HR45X, HR15Y, HR30Y, HR45Y		
Resolution		0.1HR		
Dwell Time		2～50s, can be set and stored		
Data Processing		5000 sets of measurement data, test time and test serial number are automatically stored		
Language		Chinese, English		
Testing Capacity		300mm (vertical), 220mm (horizontal)		
Power Supply		220V/110V, 50Hz, 4A		
Dimension		(690*280*860)mm		
Weight		90Kg		

Partial Display

Rockwell EN ISO 6508

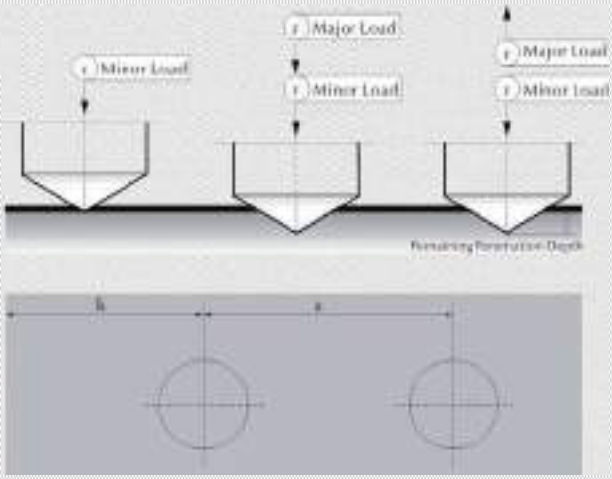

Edge distance and distance of test point to each other

Method	Base
HRA, HRC, HRD	= 100 Units(1E=0.002mm)
HRB, HRE, HRF, HRG, HRH, HRK	= 130 Units(1E=0.002mm)
HRN, HRT	= 100 Units(1E=0.001mm)

Procedure	Edge Dist. K	Impression Dist.a
A, B, C, F	3mm	3mm
N	1mm	2mm
T	2mm	2mm

Rockwell Hardness Scales

Scale Symbol	Indenter	Total Test Force(Kgf)	Dial Figures	Typical Applications of Scales
B	1/16-in(1.588mm)ball	100	Red	Copper alloys, soft steels, aluminum alloys, malleable iron, etc.
C	Diamond	150	Black	Steel, hard cast irons, pearlitic malleable iron, titanium, deep case hardened steel, and other materials harder than 100HRB.
A	Diamond	60	Black	Cemented carbides, thin steel, and shallow case-hardened steel.
D	Diamond	100	Black	Thin steel and medium case hardened steel, and pearlitic malleable iron.
E	1/8-in(3.175mm)ball	100	Red	Cast iron, aluminum and magnesium alloys, bearing metals.
F	1/16-in(1.588mm)ball	60	Red	Annealed copper alloys, thin soft sheet metals.
G	1/16-in(1.588mm)ball	150	Red	Malleable irons, copper-nickel-zinc and cupro-nickel alloys. Upper limit G92 to avoid possible flattening of ball.
H	1/8-in(3.175mm)ball	60	Red	Aluminum, zinc, lead.
K	1/8-in(3.175mm)ball	150	Red	Bearing metals and other very soft or thin materials. Use smallest ball and heaviest load that does not give anvil effect.
L	1/4-in(6.350mm)ball	60	Red	
M	1/4-in(6.350mm)ball	100	Red	
P	1/4-in(6.350mm)ball	150	Red	
R	1/2-in(12.70mm)ball	60	Red	
S	1/2-in(12.70mm)ball	100	Red	
V	1/2-in(12.70mm)ball	150	Red	

Rockwell Superficial Hardness Scales

Total Test Force,kgf (N)	Scale Symbols				
	N Scale, Diamond Indenter	T Scale, 1/16-in.(1.588-mm) Ball	W Scale, 1/8-in.(3.175-mm) Ball	X Scale, 1/4-in.(6.350-mm) Ball	Y Scale, 1/2-in.(12.70-mm) Ball
15(147)	15N	15T	W Scale, 1/8-in.(3.175-mm) Ball	15X	15Y
30(294)	30N	30T	30W	30X	30Y
45(441)	45N	45T	45W	45X	45Y

Rockwell Hardness Scales Technical Condition

Hardness Scale	Symbol	Indenter	Initial Force F_0/N	Main Force F_1/N	Total Force F/N	Hardness Range
A	HRA	120° Cone Diamond Indenter	98.07	490.3N	588.4N	20~88HRA
B	HRB	1.5875mm Ball Indenter	98.07	882.6N	980.7N	20~100HRB
C	HRC	120° Cone Diamond Indenter	98.07	1373N	1471N	20~70HRC
D	HRD	120° Cone Diamond Indenter	98.07	882.6N	980.7N	40~77HRD
E	HRE	3.175mm Ball Indenter	98.07	882.6N	980.7N	70~100HRE
F	HRF	1.5875mm Ball Indenter	98.07	490.3N	588.4N	60~100HRF
G	HRG	1.5875mm Ball Indenter	98.07	1373N	1471N	30~94HRG
H	HRH	3.175mm Ball Indenter	98.07	490.3N	588.4N	80~100HRH
K	HRK	3.175mm Ball Indenter	98.07	1373N	1471N	40~100HRK
15N	HR15N	120° Cone Diamond Indenter	29.42	117.7N	147.1N	70~94HR15N
30N	HR30N			264.8N	294.2N	42~86HR30N
45N	HR45N			411.9N	441.3N	20~77HR45N
15T	HR15T	1.5875mm Ball Indenter	29.42	117.7N	147.1N	67~93HR15T
30T	HR30T			264.8N	294.2N	29~82HR30T
45T	HR45T			411.9N	441.3N	1~72HR45T

Test Anvil

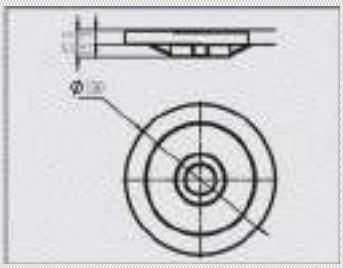

Ø150mm Flat Anvil (#811-541)
(Standard Delivery)

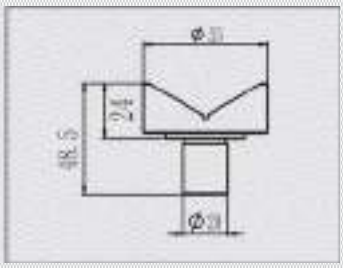

Ø40mm V-shape Anvil(#811-511)
(Standard Delivery)

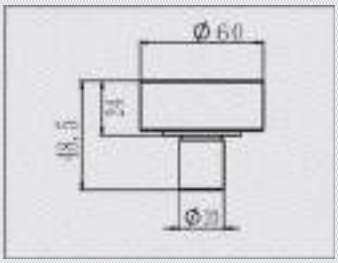

Ø60mm Flat Anvil(#811-521)
(Standard Delivery)

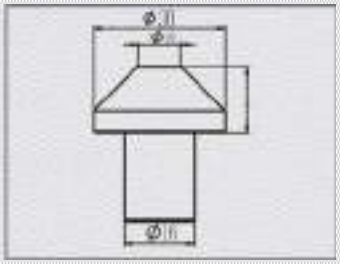

Small Flat Anvil(#811-501)
(Optional Accessories)

Hardness Block

- The hardness blocks are mainly applicable to test the accuracy and calibrate the different hardness testers.
- Conform to standard: ASTM & ISO & JB/T.
- Calibration certificate from Chinese Metrology Bureau is optional available.

Commodity	Specification	Code #	Uniformity	Roughness	Dimension(mm)	Standard
HRA Rockwell Hardness Block	28-88HRA	811-611	±0.5HRA	Ra=0.02um	Φ65x16	ASTM & ISO & JB/T
HRB Rockwell Hardness Block	88-100HRB	811-621	±0.5HRB	Ra=0.02um	Φ65x16	ASTM & ISO & JB/T
HRC Rockwell Hardness Block	25-65HRC	811-631	±0.5HRC	Ra=0.02um	Φ65x16	ASTM & ISO & JB/T
Superficial Rockwell Hardness Block	(79-91) HR15N	811-661N	±0.5HR	±0.5HR	Φ60x10	ASTM & ISO & JB/T
	(42-80) HR30N	811-671N				
	(20-70) HR45N	811-681N				
	(88-93) HR15T	811-661T				
	(70-82) HR30T	811-671T				
	(55-72) HE45T	811-681T				

Hardness Indenter

Commodity	Code #	Commodity	Code #
1/8"Ball Indenter	811-431	1/4"Ball Indenter	811-451
Ø1/8"Steel Ball	811-441	Ø 1/4"Steel Ball	811-461
1/2"Ball Indenter	811-471	Ø1.588mm Ball Indenter	811-411
Ø 1/2" Steel Ball	811-481	Cone Diamond Indenter	811-401

Weight

Force and Weights Table

Scale	Force (N)	Weights Force
HRA	588.4(60kg)	Hanger Rod+Weights A
HRB	980.7(100kg)	Hanger Rod +Weights A+Weights B
HRC	1471(150kg)	Hanger Rod +Weights A+Weights B+ Weights C
15N(T)	147.1(15kg)	Hanger Rod+Weights F
30N(T)	294.2(30kg)	Hanger Rod+Weights D
45N(T)	441.3(45kg)	Hanger Rod+Weights E

Working Cupboard/ Toolbox

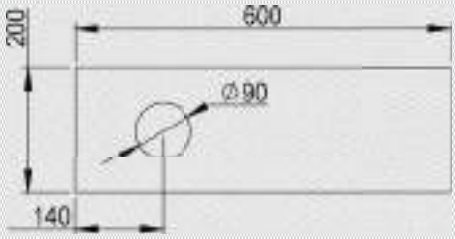

Working Cupboard
(#831-620)
(Optional Accessories)

Toolbox
(#811-901)
(Standard Delivery)

B P1-10

Manual
Brinell Hardness Tester / P 01

Electronic
Brinell Hardness Tester / P 02

Touch Screen Digital
Brinell Hardness Tester / P 03

Full-Auto
Brinell Hardness Tester / P 04

Digital Low Load
Brinell Hardness Tester / P 05

Brinell Indentation
Optical Measurement System / P 07-10

➢ Brinell Hardness Tester

Application

- The Brinell hardness test is mainly used for the hardness determination of cast iron, steel, non-ferrous metals and soft alloys. In addition, it can also be used for the determination of the hardness of some non-metallic materials such as hard plastics and bakelite. It is suitable for factories, workshops, laboratories, universities and scientific research institutions.

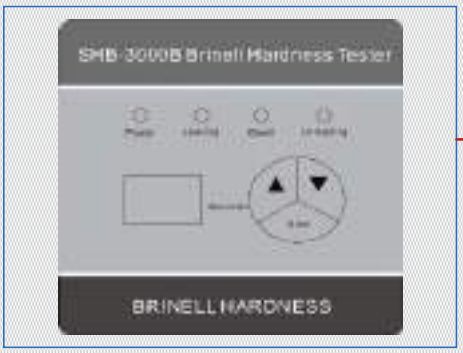

Product Features

- Solid construction, good rigidity, precise, reliable, durable, high efficiency.
- High precision reading microscope measurement system.
- Widely used in quality control, strong adaptability to working environment.
- In line with GB/T231.2, ISO 6506-2 , ASTM E10.

Specifications

Commodity		Brinell Hardness Tester	
Model		SHB-3000B	
Code#		831-101	
Test Force	Kgf	187.5, 250, 750, 1000, 3000	
	N	1839, 2452, 7355, 9800, 29400	
Measuring Range		(8-450) HBS, (8-650) HBW	
Hardness Display		Check the table of Brinell Hardness scale	
Magnification of Microscope		Analogue 20X Microscope	
Max Height of Specimen		230mm	
Instrument Throat		120mm	
Dimension		(700*268*842)mm	
Packing Dimension		(770*530*950)mm	
Gross/Net Weight		240Kg/ 210Kg	
Accuracy of Brinell hardness testing			
Hardness Range		Max Tolerance	Repetition
HBW≤ 125		≤± 3.5%	≤ 3.5%
125 < HBW≤225		≤± 2.5%	≤ 3.0%
HBW > 225		≤± 2.0%	≤ 2.5%

Reading Microscope

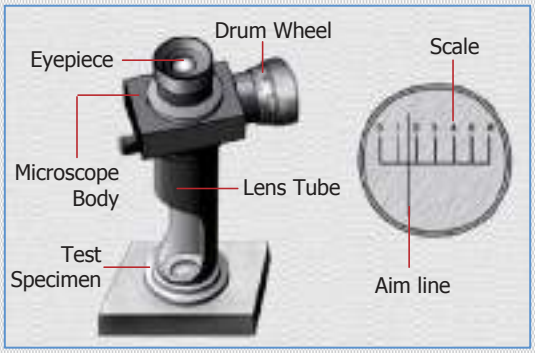

Partial Display

SHB-3000E

Product Introduction

SHB-3000E is an affordable electronic Brinell testing machine with high accuracy, reliability and durability, it is applied at the workshops and measurement departments for determining the Brinell hardness of the material of ferrous and non-ferrous metals.

Product Features

- SHB-3000E adopts the load cell to replace the traditional weight, this innovative design makes the instrument more accurate.
- Selection of testing force and dwell time is controlled and monitored on the front panel, it is automatic during the process of loading, dwell and unloading.
- SHB-3000E uses 20X Brinell measuring microscope to measure the diameter of indentation, then the operator traces the Brinell hardness table to get the testing result.

Specifications

Commodity		Electronic Brinell Hardness Tester	
Model		SHB-3000E	
Code#		831-111	
Test Force	Kgf	62.5, 100, 125, 187.5, 250, 500, 750, 1000, 1500, 3000	
	N	612.9, 980, 1226, 1839, 2452, 4900, 7355, 9800, 14700, 29400	
Measuring Range		(8-650) HBW	
Hardness Display		Check the Table of Brinell Hardness Scale	
Magnification of Microscope		Analogue 20X Microscope	
Max Height of Specimen		225mm	
Instrument Throat		135mm	
Dimension		(893*720*747)mm	
Gross/Net Weight		160Kg/130Kg	
Accuracy of Brinell hardness testing			
Hardness Range		Max Tolerance	Repetition
HBW≤ 125		≤± 3.5%	≤ 3.5%
125 < HBW≤225		≤± 2.5%	≤ 3.0%
HBW > 225		≤± 2.0%	≤ 2.5%

Product Size

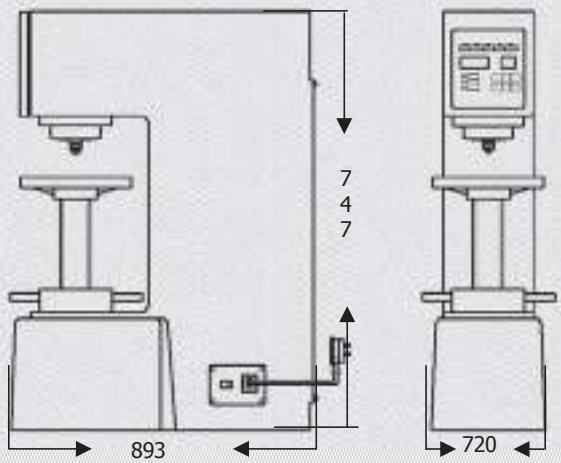

Product Introduction

Vexus SHB-3000N is a precise digital Brinell hardness testing system. The test force is made by load cell, the test force is fed back by a 0.5 ‰ precision pressure sensor. The CPU can control and automatically compensate the test force lost during the test. The indentation can be directly measured by the digital eyepiece. The test force, indentation length, load dwell time, measurement times, conversion scale, date and time can be displayed on the large screen intuitively. Only measuring the indentation and pressing the eyepiece button, then the hardness value can be calculated automatically and displayed on the screen. The data results can be saved and viewed, or output through a built-in printer.

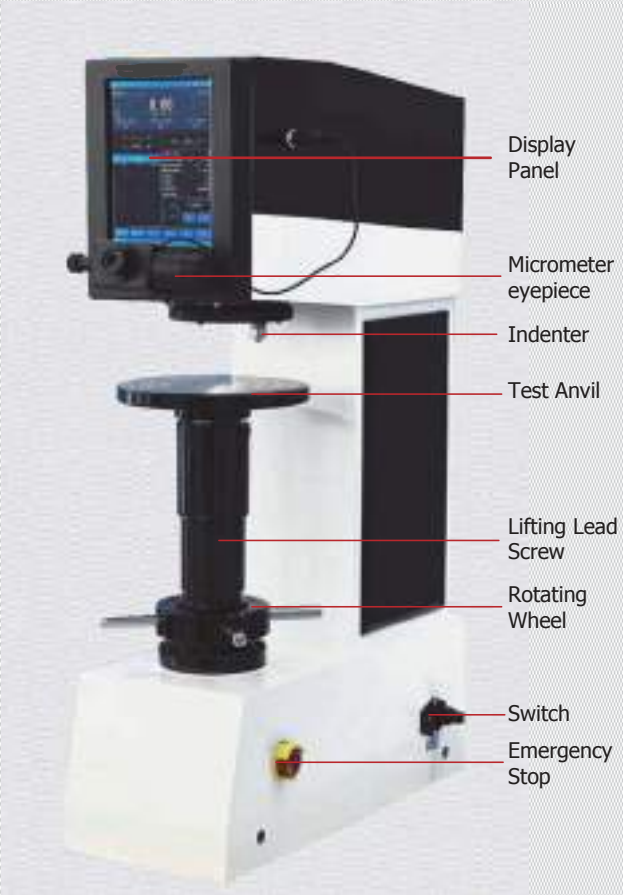

Product Features

- Test range is wider because it has ten levels of test force and can test ten kinds of Brinell scale.
- The structure is stable because the shell is formed by one-time molding and casting with special sand turning process.
- The accuracy is high and performance is stable because of the closed-loop sensor with microcomputer control system.
- Test is accurate because it loads and unloads test force electrically and the CPU can control and automatically compensate the test force lost.
- The noise produced during the test is very small, which is suitable for various laboratories.
- The working efficiency is greatly improved because of using Brinell image measurement system.

Specifications

Commodity		Touch Screen Digital Brinell Hardness Tester
Model		Vexus SHB-3000N
Code#		831-143
Test Force	N	612.9, 980.7, 1226, 1839, 2452, 4903, 7355, 9807, 14710, 29420
	kgf	62.5, 100, 125, 187.5, 250, 500, 750, 1000, 1500, 3000
Dwell Time		0~60s
Measuring Range		(8~650) HBW
Hardness Display		LCD Display, Printable output, internal printer
Brinell Ruler		HBW2.5/62.5, HBW10/100, HBW2.5/187.5, HBW5/125, HBW10/250, HBW10/500, HBW5/750, HBW10/1000, HBW10/1500, HBW10/3000
Magnification of Eyepiece		20X
Max Height of Specimen		200mm
Instrument Throat		135mm
Min Measuring Unit		0.625μm
Power Supply		AC220+5%,50~60Hz
Dimension		(550*210*750)mm
Gross/Net Weight		160/130Kg

Product Size

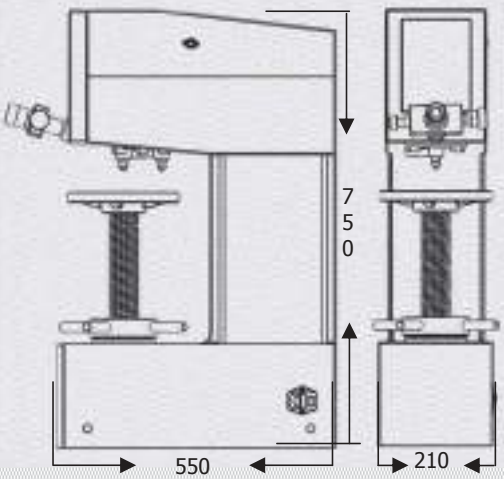

AutoBrin AB-3000V

Product Features

- AutoBrin AB-3000V has 4 ball indenters and two sets of objective lenses, and the four indenters can be installed on the hardness tester at the same time. When measuring different samples, there is no need to replace the indenter frequently;
- The automatic lifting platform adopts precise structure and has high stability. After starting the measurement, it automatically rises, and after applying the test force, it automatically returns to the focusing surface, and the measurement is performed directly, realizing the function of one-button automation;
- Built-in CCD image automatic measurement system, touch screen operation display, can preset the test force holding time, adjust the strength of the light source, display the measurement indentation length, hardness value, measurement range of hardness value, measurement times, etc.;
- The software system can also calibrate, manually fine-tune, set upper and lower limit alarms and other functions to ensure the accuracy of measurement;
- With the function of conversion scale, the conversion value between hardness scales can be selected;
- The instrument has USB interface, RJ45LAN, WLAN, RS232 port, which can be connected to the network and other devices, so that users have more optional functions.

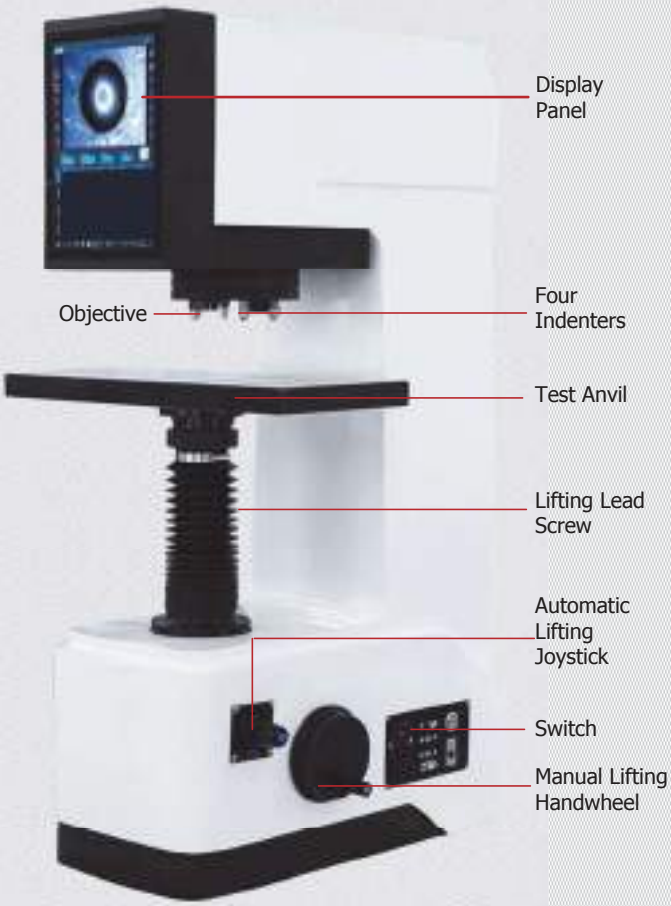

Specifications

Commodity		Fully Automatic Brinell Hardness Tester
Model		AutoBrin AB-3000V
Code#		831-169
Test Force	kgf	30, 31.25, 62.5, 100, 125, 187.5, 250, 500, 750, 1000, 1500, 3000
	N	29.42, 306.45, 612.9, 980.7, 1226, 1839, 2452, 4903, 7355, 9807, 14710, 29420
Testing scales		HB 10/3000, HB 10/1500, HB 10/1000, HB 5/750, HB 10/500, HBW 10/250, HB5/250, HB 2.5/187.5, HB 10/125, HB5/125, HB10/100, HB 5/62.5, HB2.5/62.5, HB5/31.25, HB2.5/31.25, HB1/30
Test Range		8～650HBW
Loading Method		Automatic (Loading/Dwell/Unloading), Automatic lifting
Hardness Reading		12-inchTouch Screen, Automatic Measuring
Conversion Scale		HV, HK, HRA, HRB, HRC, HRD, HRE, HRF, HRG, HRK, HR15N, HR30N, HR45N, HR15T, HR30T, HR45T, HS, HBS, HBW
Data Output		USB, RJ45LAN, WLAN, RS232
Turret		Automatic Recognition and Shifting (Four Indenters, Two Objectives)
Objective		1X , 2X
Effective Field of View		1X : 6mm , 2X : 3mm
Min. Measuring Unit		1X : 4.6μm , 2X : 2.3μm
Dwell Time		0~95s
Max. Sample Height		280mm
Throat Depth		200mm
Power Supply		AC 220V/110V±5% , 50~60 Hz
Dimension		Machine Dimension:(595*350*1070)mm, Packing Dimension:(830*490*1300)mm
Weight		Net Weight: 270kg , Gross Weight: 330kg

Partial Display

Product Features

- SHB-62.5 is a half automatic and intelligent Brinell hardness testing machine, it adopts the pressure sensor to replace the traditional quality weight, this innovative design makes the instrument more accurate.
- SHB-62.5 selection of testing force and dwell time is controlled and monitored on the front panel, it is automatic during the process of loading, dwell and unloading.
- SHB-62.5 adopts digital Brinell microscopes with adjustable LED illuminator, it doesn' t need the operator to read the detail length of indentation, it only needs operator to aim the D1, D2 diagonal of indentation and press the length key twice above the Microscope, then the built-in computer can compute the Brinell scale and display the final testing result on LCD display automatically.
- SHB-62.5 doesn' t need the operator to read the detail diameter of indentation and check the Brinell testing table, it improves the testing speed and accuracy of hardness testing obviously.

Specifications

Commodity		Digital Low Load Brinell Hardness Tester
Model		SHB-62.5A
Code#		831-302
Brinell Force	Kgf	1, 5, 6.25, 10, 15.625, 30, 31.25, 62.5
	N	9.807,49.03,61.29,98.07,153.2,294.2,306.5,612.9
Brinell Force		HBW5/62.5,HBW2.5/62.5,HBW2.5/31.25,HBW2.5/15.625, HBW2.5/6.25,HBW1/30,HBW1/60,HBW1/5
Brinell Hardness Range		(8-650) HBW
Loading Control		Automatic (Loading/Dwell/Unloading)
Turret Control		Motorized Switch
Magnification		Observation:5X/10X; Measurement:5X/10X
Eyepiece		Digital Eyepiece 10X
Dwell Time		0-60s
Hardness Conversion		HRC,HV,HBS,HBW,HK,HRA,HRD,HR15N,HR30N,HR45N,HS,HRF,HR15T,HR30T,HR45T,HRB
Max Height of Specimen		185mm
Instrument Throat		130mm
Power Supply		AC220V/50HZ;110V/60Hz
Dimension		(530*280*630)mm
Packing dimension		(610*450*770)mm
Gross/Net Weight		47Kg/35Kg

MHB-3000

Product Introduction

MHB-3000 is a portable Brinell hardness tester. It has a hydraulic system and the test force is applied by means of a handle. MHB-3000 condition is applying 3000kg test force on a 10mm carbide indenter. It can result in permanent indentations for reinspection. The test condition meets the requirements of ISO 6506 and ASTM E110.

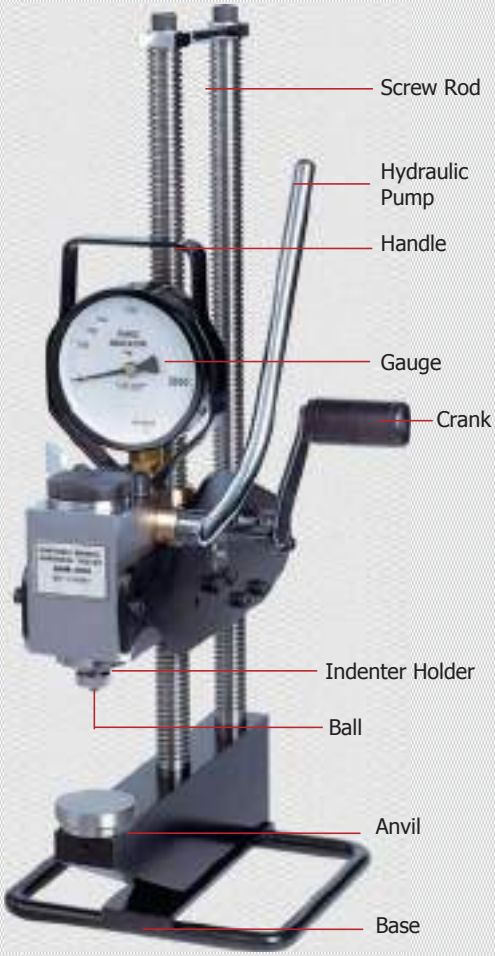

Product Features

- **On-site Testing**

It is a portable instrument suitable to use in the plant. It is easy to operate and convenient to carry. So it can be used to easy test large work-pieces in any direction on site.

- **Permanent Indentation**

With 3000kg test force and 10mm ball indenter, the indentation can accurately reflect the true harness of cast iron, cast steel, forge piece, and other materials with coarse grain. The permanent indentation can be reinspected at any time after testing.

- **Real Result**

MHB-3000 has the same principle as the bench type Brinell hardness tester. So the result is totally different from the lossy conversion value of other portable hardness testers (eg. Rebound type hardness tester).

- **Wide Testing Range**

MHB-3000 has various test forces and two different ball indenters in order to test.

Specifications

Commodity	Portable Brinell Durometer
Model	MHB-3000
Code#	832-113
Test Force	3000kg (500kg, 750kg, 1000kg, 1500kg available)
Indenter	Φ10mm carbide ball indenter (Φ 5mm available)
Measuring Range	6～650HBW
Max Height of Specimen	320mm
Instrument Throat	100mm
Accuracy	Complied with ISO 6506
Repeatability	Complied with ISO 6506
Weight	3.8Kg
Execution Standard	GB/T231.2 , JJG150,EN-ISO6506

Instrument Structure

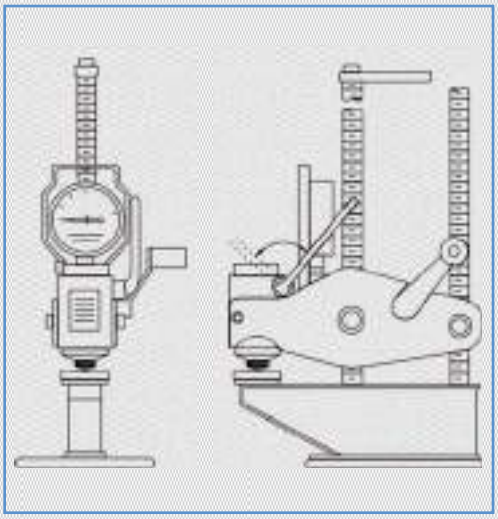

Product Introduction

QB-500 high accuracy Brinell optic measurement system mainly used to test accuracy of hardness block for manufacturer and verification lab, also available for specimens Brinell indentation measurement.

Product Features

- Apply telecentric zoom lens, can measure Brinell indentation accurately on mirror surface and rough surface.
- High accuracy microscope stage with travel 100 x 50mm, supportt specimen weight at max 15Kg.
- Non-touch optical measurement, with laser navigation, easily to find indentation.
- By BrinScan V2.0 software, realize auto measurement.

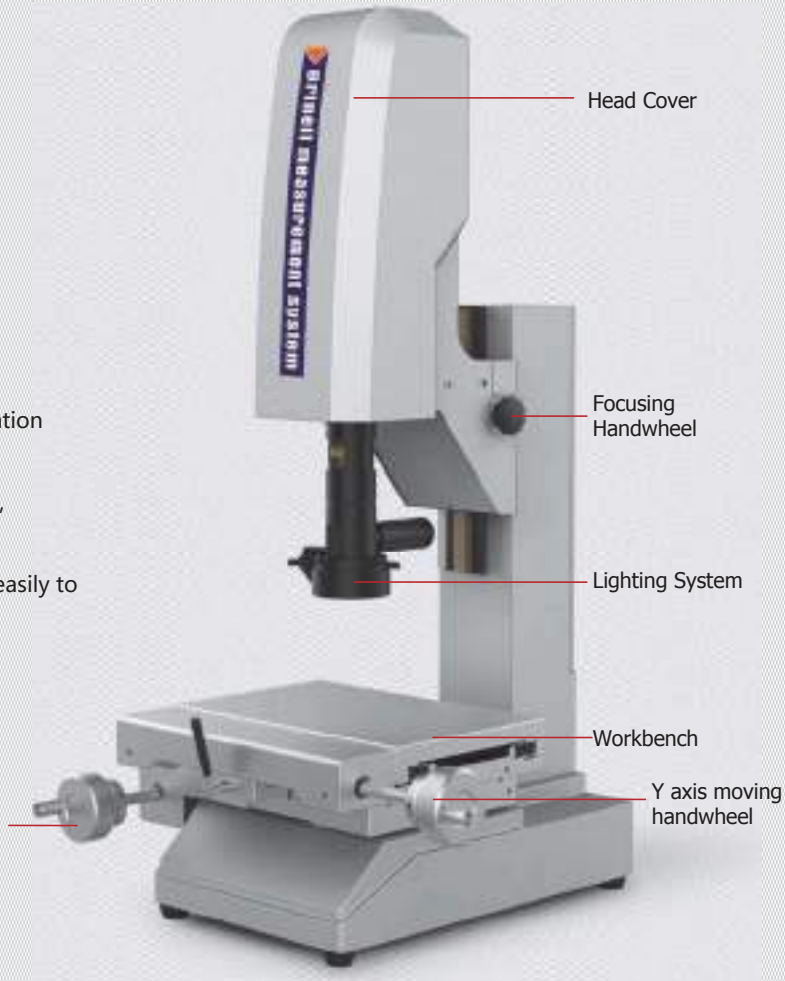

Specifications

Commodity	High Accuracy Brinell Optic Measurement System
Model	QB-500
Code#	838-390
Hardness Resolution	0.01HB
Repeatability	±1HB
Specimen Weight	15Kg
Stage Travel	(100*50)mm
Z Axis Travel	50mm
Z Axis Guiding	Dovetail groove and manual driven
Illumination	Adjustable LED cold light source, coaxial light source
Software	Brinscan V2.0
Operation OS	Win8、Win10，32/64bit，Office
Working Environment	Temperature20℃±1℃，Humidity30~80%
Voltage	220V/50HZ
Weight	20Kg
Dimension	(440*410*70)mm

Partial Display

QB-510

High Efficiency	High Accuracy	Large Travel
One Touch Operation	±1HB	100x50mm

Product Features

BrinScan applies advanced visual technology, shooting the indentation by portable digital microscope and identifying the indentation precisely even under complex background to measure Brinell hardness. Operator needn’ t predicate edge of the indentation, record indentation length, and check hardness table. BrinScan can realize auto-measuring, auto-recording, auto-saving and auto-generating hardness measuring chart.

- A professional operator needs about two minutes when completing one measurement by mechanical reading microscope ,which leads to low efficiency. And propagating errors will be caused during measuring while the operation of BrinScan needs no professional operator, and the Brinell hardness will precisely come out within one second.
- One-piece design, get rid of the entanglement between line and line, simple, fashionable, generous.
- High definition horizontal continuous zoom lens, so that the rate switch more effort-saving and fast.
- Equipped with adjustable LED surface reflection, and can independently control light brightness.
- Paired with A Windows laptop for use in the lab and on the production site.

Specifications

Commodity	Non-contact Brinell indentation optical measurement System
Model	QB-510
Code#	838-350
Measuring Range	8～650HBW
Compatible with the head	10mm, 5mm, 2.5mm,1mm
Lighting Source	Adjustable LED surface light illumination
Rack Travel	Z axis Travel:100mm
Indentation Resolution	0.1um
Hardness Resolution	0.1HBW
Accuracy of Measurement	±1%(HBW10/3000)
The length of the indentation	1.2～6mm
The operating system	Windows Operation System
Working power supply	AC90~240V/50~60HZ

Product Introduction

Brinell Hardness measurement System applies advanced machine vision technology with USB portable camera to take picture for Brinell indentation. It can accurately recognize the indentation image in complicated background, measure the hardness value precisely and display on software interface. It realizes fast and simple, and reliable test process and the measurement of indentetion image will not be affected by operator,surface roughness and other factors.

Product Features

- Stylish appearance, portable and high definition USB camera, optimized ergonomic design, comfortable hand feeling.
- Convenient operation, click auto-measuring button after finding the indentation, it will simultaneously display the indentation diameter and Brinell hardness value and do data record.
- Measurement accuracy of diameter can reach 0.001mm, totally conform ASTM E-10, GBT 231,ISO_6506 and other standards.
- Available to setup tolerance (upper limit& lower limit)
- Available to realize hardness conversion according to ASTM_E140,DIN 50150 , GBT_1172, etc.
- Available to setup auto-save image and corresponding measuring result files, generating reports.
- Available to setup and auto-save date, hardness parameters, hardness value, and storage location of images.
- For image files and data files, opening, saving, printing, modification, invoking can be carried out.
- Real-time statistics measuring data, display Max, Min, Ave, deviation, CP, CK, etc.

Product Application

BrinScan can be used in lab, and also can be used in connect with Windows tablet PC and laptop on site.

Measurement System

One-key Measuring

BrinScan has a simple and generous interface, operator can use without professional training. There is no need to do manual selection, just one key operation, the indentation diameter and hardness value will come out.

Auto-Identification

BrinScan can identify indentation edge automatically, and measuring indentation circle automatically (above 200 points for one circle). It calculates diameter and gets Brinell hardness automatically. For large indentation, the whole indentation don't have to show up, more than 1/2 indentation appear on the interface can be measured.

HD Image

Microscope applies LED cold light source, high definition optical system and CMOS digital camera. Indentation can clearly re-appear in image .

Magnetic Probe

The contact surface of measuring microscope applies ring magnet, making it adsorbs vertically on the magnetic specimen without help of hands.

Report Output

BrinScan displays indentation diameter, measuring value, Max, Min, conversion value (HRA, HRB,HRC,HV,HS, tensile strength, etc.) . Auto saving indentation image, and department and operator can be user defined. Word, Excel can be generated automatically without manual record.

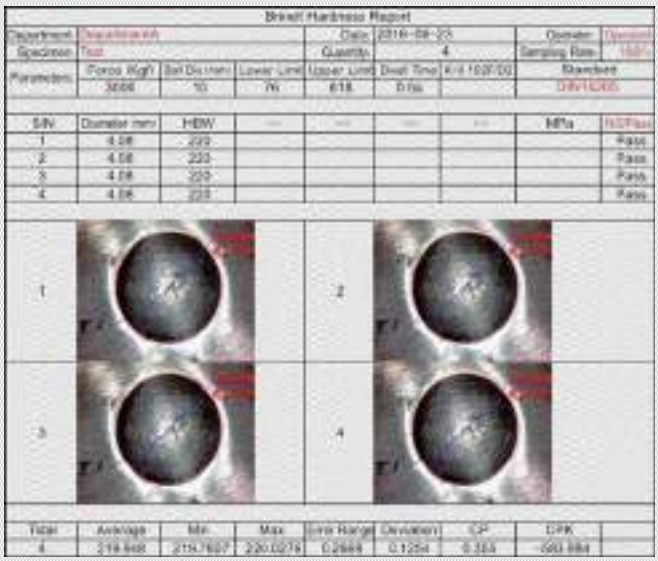

Strong Compatibility

BrinScan can be used in connect with any kind of Brinell Hardness Tester, compatible with WIN7, WIN8, WIN10, WIN11

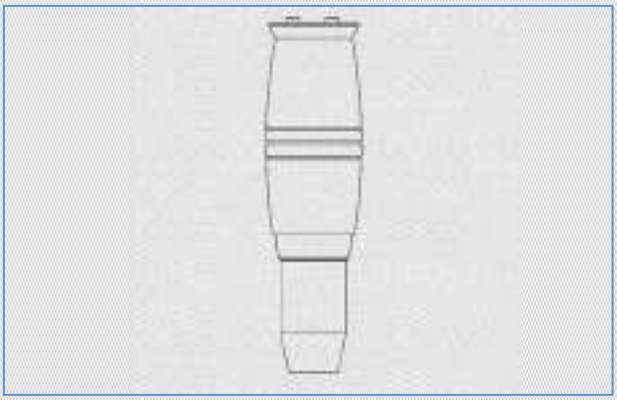

Specifications

Commodity	Brinell Optical Measuring System
Camera Field of View	3.3x2.2mm
Measuring Range	8～650HBW
Indentation Resolution	0.1um
Hardness Resolution	0.1HBW
Measuring Accuracy	±1%(HBW10/3000)
Compatible Indenter	10mm and 5mm steel ball
Indentation Length	1.2～6mm
Operating System	Win7, Win8, Win10, Win11

M P1-10

Manual
Micro Vickers Hardness Tester / P 01-02

Digital
Micro Vickers Hardness Tester / P 03-04

Advanced Digital
Micro Vickers Hardness Tester / P 05-06

Full-Auto
Micro Vickers Hardness Tester / P 07-08

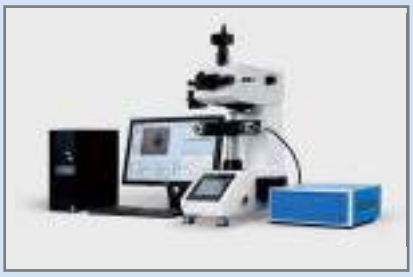

Accessories / P 09-10

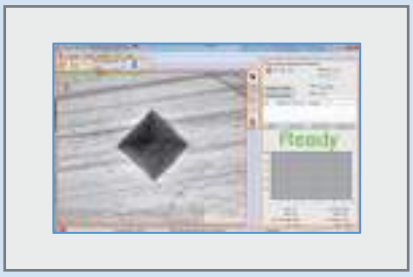

➢ **Micro Vickers Hardness Tester**

Application

- Carburized layer, ceramics, steel, non-ferrous metals, thin plates, metal flakes, electroplated layers, small specimens.
- Gradient measurement of nitride layer, forest carbon layer and quench hardened layer.

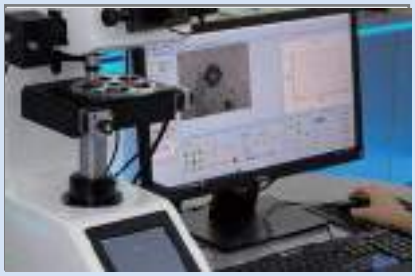

MicroVicky VM1010

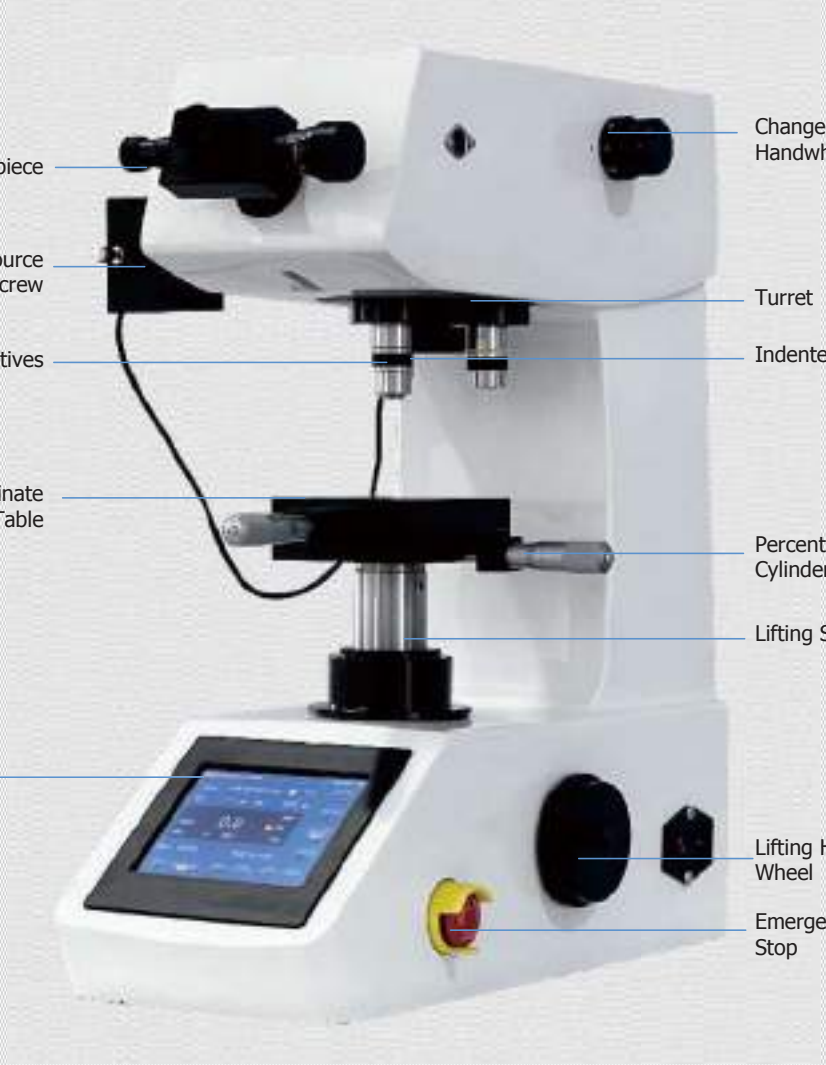

Color Touch Screen

Product Features

- Color touch screen. Auto hardness conversion to other scales.
- Gradient test can be performed, and the depth of hardened layer can be automatically calculated.
- With data viewing functions, data can be printed via Bluetooth.
- Automatic loading, dwelling, and unloading during the testing process, simple operation, no human operating error.
- Upgraded manual lifting system on the side of the worm gear, and the screw has no gap.
- Upgraded optical system with clear image of indentation, and improve the accuracy of the measurement.

Product Size

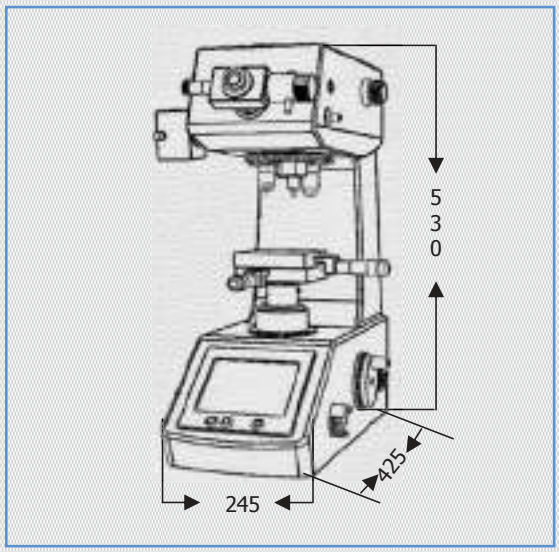

Specifications

Commodity		Micro Vickers Hardness Tester	
Model		MicroVicky VM1010	MicroVicky VM1010A
Code#		823-102	823-102A
Numerical input method		Manual	Manual
Lens and Indenter Switch		Manual Turret	Auto Turret
Loading Force	N	0.098, 0.246, 0.49, 0.98, 1.96, 2.94, 4.90, 9.80	
	gf	10, 25, 50, 100, 200, 300, 500, 1000	
Dwell Time		1~60s adjustable	
Loading Control		Automatic	
Magnification		100x/400x(500x customizable)	
Minimum measurement unit		0.025 μm	
Analogue X-Y Anvil		Size : (100*100)mm; Travel: (25*25)mm	
Max. Height of Specimen		90mm	
Instrument Throat		120mm	
Dimension(LxWxH)		(425*245*530)mm	
Packing Dimension		(500*490*720)mm	
Gross/Net Weight		70Kg/55Kg	
Power Supply		AC220V,50/60HZ	

Accessories

X-Y Working Stage
(#823-701)
(Standard Delivery)

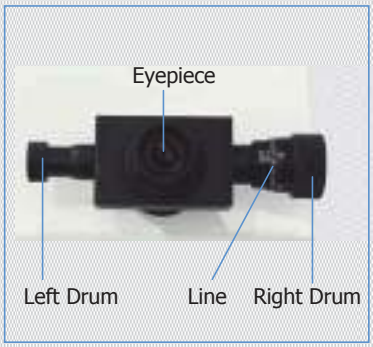

Mechanical Eyepiece for Reading
(#823-301)
(Standard Delivery)

10X/40X Measuring Objective
(#823-311/823-341)
(Standard Delivery)

Partial Display

Color Touch Screen

Product Features

- Color touch screen. Auto hardness conversion to other scales.
- Gradient test can be performed, and the depth of hardened layer can be automatically calculated.
- With data viewing functions, data can be printed via Bluetooth.
- Automatic loading, dwelling, and unloading during the testing process, simple operation, no human operating error.
- Upgraded manual lifting system on the side of the worm gear, and the screw has no gap.
- Upgraded optical system with clear image of indentation, and improve the accuracy of the measurement.

Upgraded Video Micro Vickers Hardness Tester

Specifications

Commodity		Digital Micro Vickers Hardness Tester	
Model		MicroVicky VH1010	MicroVicky VH1010A
Code#		823-162	823-162A
Numerical input method		Auto	Auto
Lens and Indenter Switch		Manual Turret	Auto Turret
Loading Force	N	0.098, 0.246, 0.49, 0.98, 1.96, 2.94, 4.90, 9.80	
	gf	10, 25, 50, 100, 200, 300, 500, 1000	
Dwell Time		1~60s adjustable	
Loading Control		Automatic	
Magnification		100x/400x(500x customizable)	
Minimum measurement unit		0.025 μm	
Analogue X-Y Anvil		Size: (100*100)mm; Travel: (25*25)mm	
Max. Height of Specimen		90mm	
Instrument Throat		120mm	
Dimension(LxWxH)		(425*245*530)mm	
Packing Dimension		(500*490*720)mm	
Gross/Net Weight		70Kg/55Kg	
Power Supply		AC220V, 50/60HZ	
Execution Standard		ISO 6507, ASTM E92, JIS Z2244, GB/T 4340.2	

Accessories

Digital Eyepiece
(#823-351)
(Standard Delivery)

USB CMOS Camera
(#484-132)
(Optional Accessories)

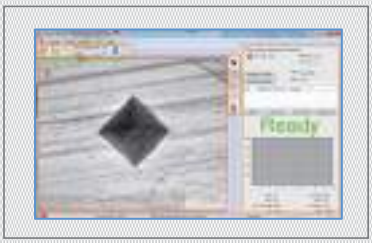

Vickers Measuring System
(823-381)
(Optional Accessories)

Partial Display

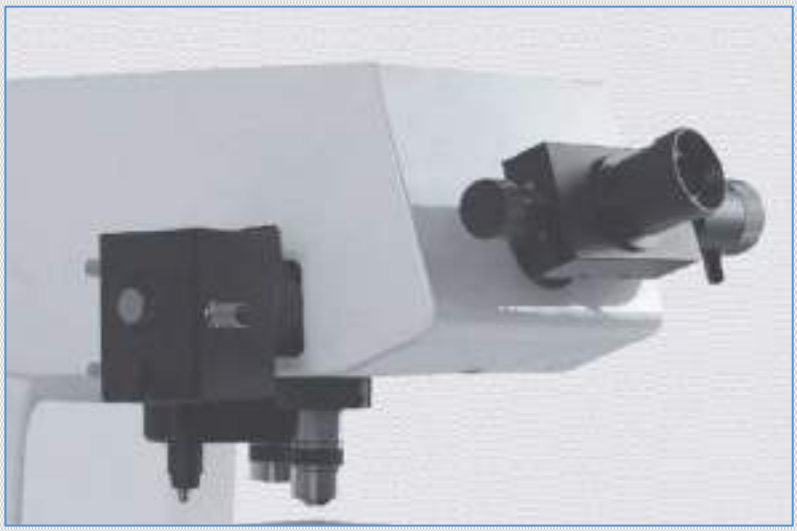

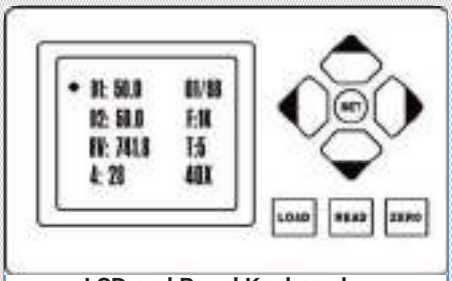

LCD and Panel Keyboard

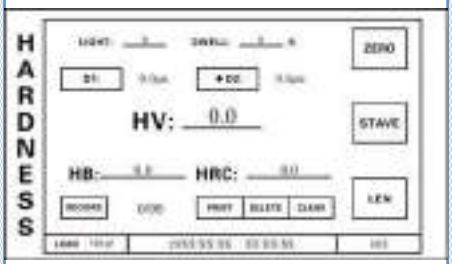

Touch Screen Interface

Product Features

- Vexus MHV-1000Z Series are precision micro Vickers hardness testing machines integrated the technology of optics, mechanics and compute, and it is focus on the Vickers testing under the small force, and mainly applicable to measure the hardness value of ferrous metals and non ferrous metals;
- Vexus MHV-1000Z Series equipped with a LCD screen, the operation is more directly and clearly;
- Vexus MHV-1000Z Series can display the measuring methods, testing force, indentation length, hardness value, dwell time of the testing force as well as the number of measurement;
- Vexus MHV-1000Z Series can save and revise the date, record the measuring results, compute the data, output the information with the printer;
- Vexus MHV-1000Z Series hardness conversion among 4 hardness scales, and linking to PC in RS 232 interface and cable;
- Vexus MHV-1000Z Series adopt the design of double indenters, it equips with HV and HK indenter together, It is more suitable to measure the hardness of IC thin sections, coatings , ply metals; Glass, ceramics, agate , precious stones and other brittle and hard material.

Upgraded Touch Screen

Specifications

Commodity		Single-Indenter Digital Micro Vickers Hardness Tester	Double-Indenter Digital Micro Vickers Hardness Tester
Model		Vexus MHV-1000Z	Vexus MHV-1000ZK
Code#		823-113	823-123
Loading Force	gf	10, 25, 50, 100, 200, 300, 500, 1000	
	N	0.098, 0.246, 0.49, 0.98, 1.96, 2.94, 4.90, 9.80	
Indenter		HV Indenter	HV and HK Indenter
Measuring Range		1HV-2967HV	
Indentation Measurement		Digital Sensor Measurement	
Turret		Auto-Turret	
Loading Control		Automatic (Loading, Dwell, Unloading)	
Magnification of Microscope		Observation:10X; Measurement:40X	
Digital Eyepiece		Magnification: 10X	
Hardness Conversion		HRA, HRB, HRC, HK, HBW, etc.	
Dwell Time		Adjustable 1~99s	
Display		D1, D2, HV/HRC/HB/HK, Time	
X-Y Anvil		Size:(100*100)mm; Travel:(25*25)mm; Resolution: 2um	
Illumination		Adjustable LED Cold light-source	
Max. Height of Specimen		95mm	
Instrument Throat		120mm	
Power Supply		AC220V/50Hz; AC110V/60Hz	
Dimension		(395*250*490)mm	
Packing Dimension		(530*450*750)mm	
Gross / Net Weight		50Kg/40Kg	
Executive Standard		ISO 6507, ASTM E92, JIS Z2244, GB/T4340	

Product Size

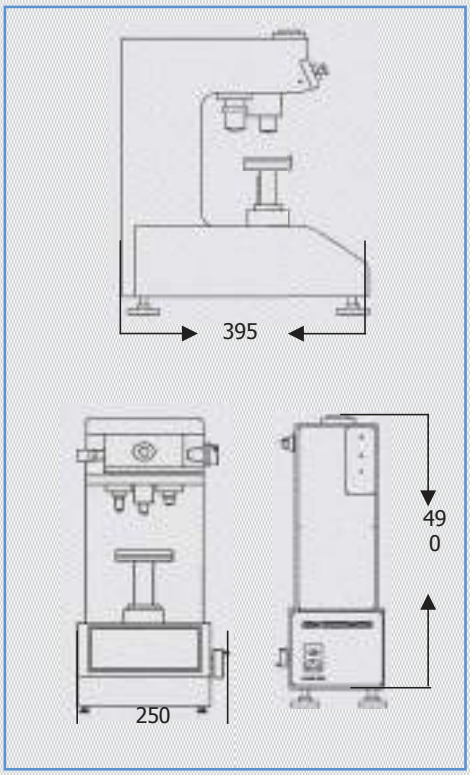

Partial Display

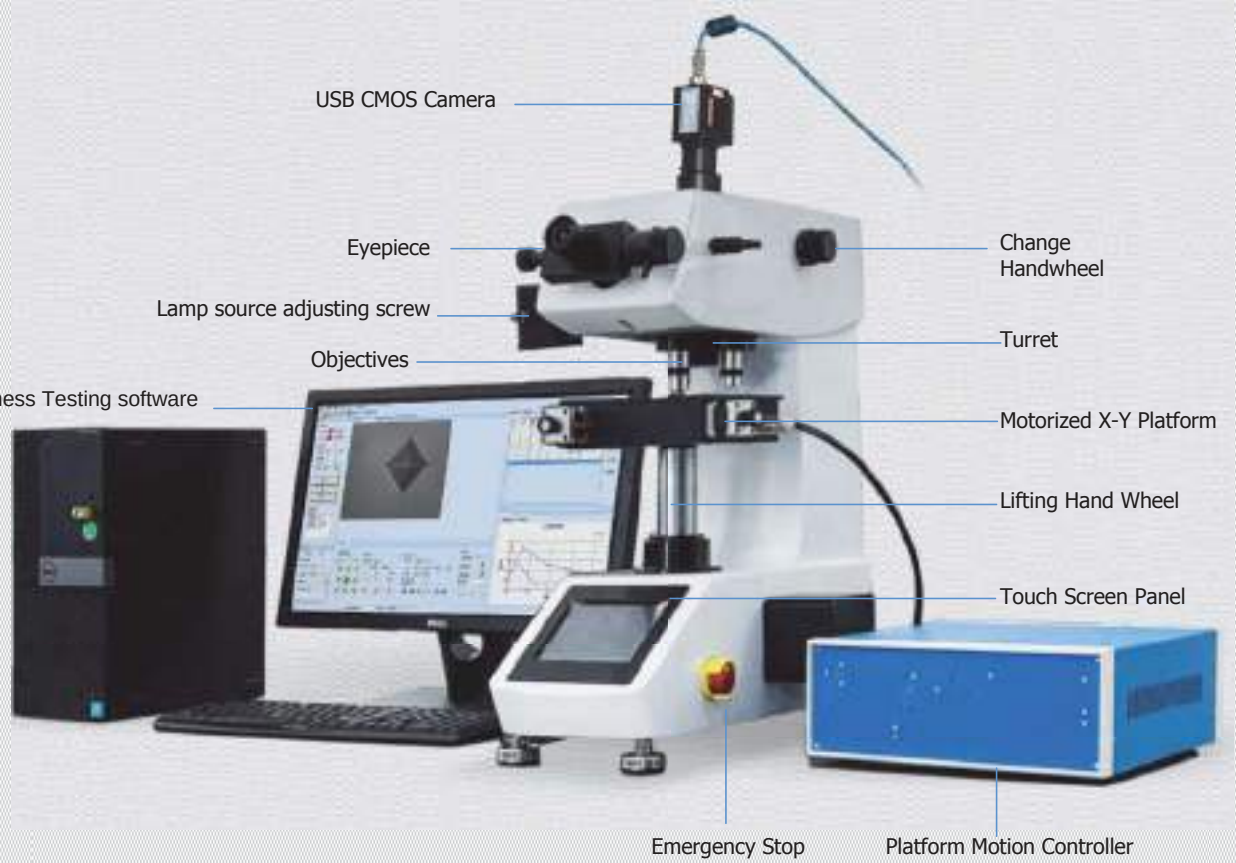

Product Application

AutoVicky ZHV-VH1010 is an automatic micro-Vickers hardness testing system with machine vision, motorized X-Y platform and computer software system, it is applied to test Vickers hardness scales of metals, ceramics, and composites. Since the test indentation is very small in a Vickers test, it is useful for a variety of applications: testing very thin materials like foils or measuring the surface of a part, small parts or small areas, measuring individual microstructures, or measuring the depth of case hardening by sectioning a part and making a series of indentations to describe a profile of the change in hardness.

Product Features

- Excellent Boldy of VH1010 Micro Vickers Hardness Testers with linear displacement lifting structure for the weight loading system.
- Precise Eight-Class dead weight system from 10gf to 1000gf, and Automatic loading, dwelling, and unloading during the testing process
- Stable automatic turret with 3-working-position, MicroVickers diamond indenter, 10x and 40x objective are installing on one focal plane.
- High-definition optical path with 5MPixel Camera makes the hardness indention sharply, the video magnification is over than 2000x, it makes the measurement of small indention easily.
- Motorized X-Y platform with metal size 110x100mm and measuring stoke is 50x50mm, it can be programmed to test the Vickers hardness of specimen automatically.
- Z-axis Manual Focus System as standard delivery, it is optional about the Z-axis automatic focusing system.
- Powerful automatic Vickers testing software ATS-100 with smart testing functions
- Windows operating system, Word, Excel, PDF and other Customized output reports are available.

Specifications

Commodity		Automatic MicroVickers Hardness Tester
Model		AutoVicky ZHV-VH1010
Code#		823-170-1010
Loading Force	N	0.098, 0.246, 0.49, 0.98, 1.96, 2.94, 4.90, 9.80
	gf	10, 25, 50, 100, 200, 300, 500, 1000
Loading System		Automatic
Motorized X-Y Stage		Mini-Step-Motor with Size L:180*W:140mm
X-Y Stage Stroke		50x50mm
Minimum Step		0.625um
Language		English
Loading Time		1~60s adjustable
Turret		Automatic-turret
Objective		10×, 40×
Z-axis Focusing System		Manual-Focus by Worm Gear System
Minimum Measurement Unit		0.025 μm
Max. Height of Specimen		90mm
Instrument Throat		120mm
Power Supply		220 VAC, 50/60 Hz
Dimension (L×W×H)		(425*245*530)mm
Automatic Testing Software		ATS-100 Image Analysis and Measurement Software (Dongle and CD)
Camera Type		5 Megapixel HD Camera
Camera Adapter Tube		ZHV-VH1010-1X
Motion Controller		X-Y Automatic Platform Control System
Computer System		Dell 3090MT
Monitor		21.5" HDMI Monitor
Net Weight		40kg
Gross Weight		55kg

Accessories

Filament Clamp
(#823-761)
(Optional Accessories)

Flat Precision Clamp
(#823-711)
(Optional Accessories)

Thin-Piece Clamp
(#823-751
(Optional Accessories)

Indenter Protective Sleeve
(#823-491)
(Optional Accessories)

Partial Display

Hardness Block

- The hardness blocks are mainly applicable to test the accuracy and calibrate the different hardness testers.
- Conform to standard: ASTM & ISO & JB/T.
- Calibration certificate from Chinese Metrology Bureau is optional available.

Commodity	Specification	Code #	Uniformity	Roughness	Dimension(mm)	Standard
Micro Vickers Hardness Block	(200-300)HV0.05	823-671	±3%HV	Ra=0.02um	Φ25x5	ASTM & ISO & JB/T
	(200-300)HV0.1	823-661				
	(400-500)HV0.1	823-651				
	(400-500)HV 0.2	823-641				
	(700-800)HV0.2	823-631				
	(700-800)HV0.5	823-621				
	(700-800)HV1	823-611				

Hardness Indenter

Commodity	Code #	Commodity	Code #
Indenter HV	823-401	Indenter HK	823-411

Another Accessories

Digital Micrometer Head
(#823-719)
(Optional Accessories)

10X 20X 40X

Measuring Objective
(#823-311/823-321/823-341)
(Optional Accessories)

CCD Adapter
(#823-361/360)
(Optional Accessories)

Bubble Level Meter
(#823-931)
(Optional Accessories)

Wireless Printe
(#811-361)
(Optional Accessories)

Motorized X-Y Platform
(#823-701)
(Optional Accessories)

Vickers Hardness Comparison Table

Hardness Value	Indentation Diagonal Length d/um									Hardness Value	Indentation Diagonal Length d/um								
HV	HV 0.1	HV0.2	HV 0.3	HV 0.5	HV 1	HV 3	HV 5	HV 10	HV 30	HV	HV0.1	HV 0.2	HV0.3	HV 0.5	HV 1	HV 3	HV 5	HV 10	HV 30
80	48.2	68.1	83.4	108.0	152.0	264.0	340.0	480.0	830.0	360	22.7	32.1	39.3	50.8	71.8	124.0	161.0	227.0	393.0
85	46.7	66.1	81.0	104.0	148.0	256.0	330.0	467.0	809.0	370	22.4	31.7	38.8	50.1	70.8	123.0	158.0	224.0	388.0
90	45.4	64.2	78.5	102.0	144.0	249.0	321.0	454.0	786.0	380	22.1	31.3	38.2	49.4	69.9	121.0	156.0	221.0	383.0
95	44.2	62.5	76.5	99.0	140.0	242.0	312.0	442.0	765.0	390	21.8	30.8	37.8	48.8	69.0	119.0	154.0	218.0	378.0
100	43.1	60.8	74.5	96.0	136.0	236.0	305.0	431.0	745.0	400	21.5	30.5	37.3	48.2	68.1	118.0	152.0	215.0	373.0
105	42.0	59.4	72.8	94.0	133.0	230.0	297.0	420.0	728.0	410	21.3	30.1	36.8	47.6	67.3	116.0	150.0	213.0	369.0
110	41.1	58.1	71.0	92.0	130.0	225.0	290.0	411.0	711.0	420	21.0	29.7	36.4	47.0	66.5	115.0	149.0	210.0	364.0
115	40.2	56.8	69.6	90.0	127.0	220.0	284.0	402.0	696.0	430	20.8	29.4	36.0	46.5	65.7	114.0	147.0	208.0	360.0
120	39.3	55.6	68.2	87.9	125.0	215.0	278.0	393.0	681.0	440	20.5	29.0	35.6	45.9	64.9	112.0	145.0	205.0	356.0
125	38.5	54.4	66.7	86.1	122.0	211.0	272.0	385.0	667.0	450	20.3	28.7	35.2	45.4	64.2	111.0	144.0	203.0	352.0
130	37.8	53.4	65.4	84.5	120.0	207.0	267.0	378.0	654.0	460	20.1	28.4	34.8	44.9	63.5	110.0	142.0	201.0	348.0
135	37.1	52.4	64.2	82.9	117.0	203.0	262.0	371.0	642.0	470	19.9	28.1	34.4	44.4	62.8	108.0	140.0	199.0	344.0
140	36.4	51.4	63.0	81.4	115.0	200.0	257.0	364.0	630.0	480	19.7	27.8	34.0	44.0	62.2	107.0	139.0	197.0	340.0
145	35.8	50.5	62.0	80.0	113.0	196.0	253.0	358.0	619.0	490	19.5	27.5	33.7	43.5	61.5	106.0	138.0	195.0	337.0
150	35.1	49.7	60.9	78.6	111.0	193.0	249.0	352.0	609.0	500	19.3	27.3	33.4	43.1	60.9	105.0	136.0	193.0	334.0
155	34.6	49.0	60.0	77.3	109.0	190.0	245.0	346.0	599.0	510	19.1	27.0	33.0	42.6	60.3	104.0	135.0	191.0	330.0
160	34.1	48.1	59.0	76.1	108.0	187.0	241.0	341.0	589.0	520	18.9	26.7	32.7	42.2	59.7	103.0	134.0	189.0	327.0
165	33.5	47.4	58.0	75.0	106.0	184.0	237.0	335.0	580.0	530	18.7	26.5	32.4	41.8	59.2	102.0	132.0	187.0	324.0
170	33.0	46.7	57.2	73.8	104.0	181.0	234.0	330.0	572.0	540	18.5	26.2	32.1	41.4	58.6	101.0	131.0	185.0	321.0
175	32.6	46.0	56.4	72.7	103.0	179.0	230.0	326.0	564.0	550	18.4	26.0	31.8	41.1	58.1	100.0	130.0	184.0	318.0
180	32.1	45.4	55.6	71.7	102.0	176.0	227.0	321.0	556.0	560	18.2	25.7	31.5	40.7	57.6	99.7	129.0	182.0	315.0
185	31.7	44.8	54.8	70.8	100.0	174.0	224.0	317.0	548.0	570	18.0	25.5	31.2	40.3	57.1	98.8	128.0	180.0	312.0
190	31.3	44.2	54.1	69.8	98.8	171.0	221.0	313.0	541.0	580	17.9	25.3	31.0	40.0	56.6	97.9	127.0	179.0	310.0
195	30.9	43.6	53.4	68.9	97.5	169.0	218.0	309.0	534.0	590	17.7	25.1	30.7	39.7	56.1	97.1	125.0	177.0	307.0
200	30.5	43.1	52.8	68.1	96.3	167.0	216.0	305.0	527.0	600	17.6	24.9	30.4	39.3	55.6	96.3	124.0	176.0	305.0
205	30.1	42.5	52.1	67.2	95.1	165.0	213.0	301.0	521.0	610	17.4	24.7	30.2	39.0	55.2	95.5	123.0	175.0	302.0
210	29.7	42.0	51.5	66.4	93.9	163.0	210.0	297.0	515.0	620	17.3	24.5	30.0	38.7	54.7	94.7	122.0	173.0	300.0
215	29.4	41.5	50.9	65.7	92.8	161.0	208.0	294.0	509.0	630	17.2	24.3	29.7	38.4	54.3	94.0	121.0	172.0	297.0
220	29.1	41.1	50.4	64.9	91.8	159.0	206.0	291.0	503.0	640	17.0	24.1	29.5	38.1	53.8	93.2	120.0	170.0	295.0
225	28.7	40.6	49.7	64.2	90.7	157.0	203.0	287.0	497.0	650	16.9	23.9	29.2	37.8	53.4	92.5	119.0	169.0	293.0
230	28.4	40.2	49.2	63.5	89.7	156.0	201.0	284.0	492.0	660	16.8	23.7	29.0	37.5	53.0	91.8	118.0	168.0	290.0
235	28.1	39.7	48.7	62.8	88.8	154.0	199.0	281.0	487.0	670	16.6	23.5	28.8	37.2	52.6	91.1	117.0	166.0	288.0
240	27.8	39.3	48.2	62.1	87.9	152.0	197.0	278.0	482.0	680	16.5	23.3	28.6	36.9	52.2	90.5	116.0	165.0	286.0
245	27.5	38.9	47.6	61.5	87.0	151.0	195.0	275.0	477.0	690	16.4	23.2	28.4	36.7	51.8	89.8	115.0	164.0	284.0
250	27.3	38.5	47.2	60.9	86.1	149.0	193.0	273.0	472.0	700	16.3	23.0	28.2	36.4	51.5	89.2	114.0	163.0	282.0
255	27.1	38.2	46.7	60.3	85.2	148.0	191.0	270.0	467.0	720	16.0	22.7	27.8	35.9	50.8	87.9	113.0	160.0	278.0
260	26.7	37.8	46.2	59.7	84.4	146.0	189.0	267.0	463.0	740	15.8	22.4	27.4	35.4	50.1	86.7	112.0	158.0	274.0
265	26.5	37.4	45.8	59.2	83.6	145.0	187.0	265.0	458.0	760	15.6	22.1	27.0	34.9	49.4	85.6	110.0	156.0	271.0
270	26.2	37.1	45.4	58.6	82.8	144.0	185.0	262.0	454.0	780	15.4	21.8	26.7	34.5	48.8	84.5	109.0	154.0	267.0
275	26.0	36.7	45.0	58.1	82.1	142.0	184.0	260.0	450.0	800	15.2	21.5	26.4	34.0	48.2	83.4	108.0	152.0	264.0
280	25.8	36.4	44.6	57.5	81.4	141.0	182.0	258.0	446.0	820	15.0	21.3	26.0	33.6	47.6	82.4	106.0	150.0	261.0
285	25.5	36.1	44.2	57.0	80.6	140.0	180.0	255.0	442.0	840	14.9	21.0	25.8	33.2	47.0	81.4	105.0	149.0	257.0
290	25.3	35.8	43.8	56.5	79.9	139.0	179.0	253.0	438.0	860	14.7	20.8	25.4	32.8	46.4	80.4	104.0	148.0	254.0
295	25.1	35.5	43.4	56.1	79.3	137.0	177.0	251.0	434.0	880	14.5	20.5	25.2	32.5	45.9	79.5	102.0	145.0	251.0
300	24.9	35.2	43.0	55.6	78.6	136.0	176.0	249.0	431.0	900	14.3	20.3	24.9	32.1	45.4	78.6	101.0	144.0	249.0
310	24.5	34.6	42.4	54.7	77.3	134.0	173.0	245.0	424.0	920	14.2	20.1	24.6	31.8	44.9	77.7	100.0	142.0	246.0
320	24.1	34.1	41.6	53.8	76.1	132.0	170.0	241.0	417.0	940	14.0	19.9	24.3	31.4	44.4	76.9	99.3	140.0	243.0
330	23.7	33.6	41.0	53.0	75.0	130.0	168.0	237.0	411.0	960	13.9	19.7	24.1	31.1	44.0	76.1	98.3	139.0	241.0
340	23.4	33.1	40.4	52.2	73.9	128.0	165.0	234.0	405.0	980	13.8	19.4	23.8	30.8	43.5	75.4	97.3	138.0	238.0
350	23.0	32.6	39.8	51.5	72.8	126.0	163.0	230.0	399.0	1000	13.6	19.3	23.6	30.5	43.1	74.6	96.3	136.0	236.0

Vickers:tolerable repeatability precision of test machine

Hardness of test block	HV 5-HV 100	HV 0.2-HV 5	<HV 0.2
≤225 HV	0.03 x d	0.06 x d	0.06 x d
>225HV	0.02 x d	0.04 x d	0.05 x d

HV 0.2-<HV 5		HV 5-<HV 100	
Hardness of test block	HV	Hardness of test block	HV
100	12	100	6
200	24	200	12
250	20	250	8
350	28	350	11
600	48	600	24
750	60	750	30

Vickers:max.tolerable deviation of hardness testing machine in percent

Hardness	100	200	300	400	500	600	700	800	900	1000	1500
HV0.05	8	10									
HV0.1	7	8	9	10	10						
HV0.2	6	5	8	9	9	11	11	12	12		
HV0.3	4	5	8	7	8	9	10	10	11	11	
HV0.5	4	4	5	6	6	7	7	8	8	9	11
HV1	3	3	4	4	5	5	5	6	6	6	8
HV 2	3	3	3	4	4	4	4	4	5	5	6
HV 3	3	3	3	3	3	4	4	4	4	4	5
HV 4	3	3	3	3	3	3	3	3	3	4	4
HV 10	3	3	3	3	3	3	3	3	3	3	3
HV 20	3	3	3	3	3	3	3	3	3	3	3
HV 30	3	3	2	2	2	2	2	2	2	2	2
HV 50	3	3	2	2	2	2	2	2	2	2	2
HV 100	3	3	2	2	2	2	2	2	2	2	2

V P1-08

Auto-Turret
Vickers Hardness Tester / P 01-02

Automatic
Micro Vickers Hardness Tester / P 03-04

Automatic Micro & Macro
Vickers and Knoop Hardness Tester / P 05-06

Vickers
Measurement Software / P 07

Accessories / P 08

➢ **Vickers Hardness Tester**

Application

- Ferrous metal, non-ferrous metal, IC sheet, surface coating, laminated metal;
- Glass, ceramics, agate, precious stones, thin plastics, etc.;
- Hardness test of the depth and gradient of the carbide layer and quenching layer;
- Suitable for precise Vickers measurement of parallel planes, tiny parts and ultra-thin parts.

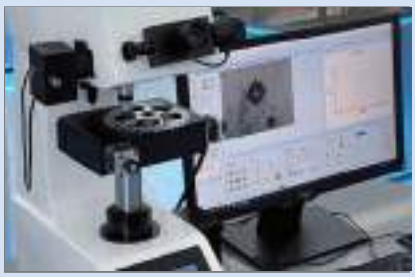

Color Touch Screen

Product Features

- The fuselage part of the product is formed at one time by the casting process, and has undergone a long-term aging treatment. Compared with the paneling process, the longterm use of the deformation is small, and it can effectively adapt to various harsh environments;
- Car baking paint, high-grade paint quality, strong scratch resistance, and still bright as new after many years of use;
- The optical system designed by the senior optical engineer not only has a clear image, but also can be used as a simple microscope, with adjustable brightness, comfortable vision, and not easy to fatigue after long-term operation;
- Equipped with an automatic turret, the operator can easily and freely switch the high and low magnification objective lenses to observe and measure the sample, avoiding the damage to the optical objective lens, indenter and test force system caused by human operation habits.

Product Size

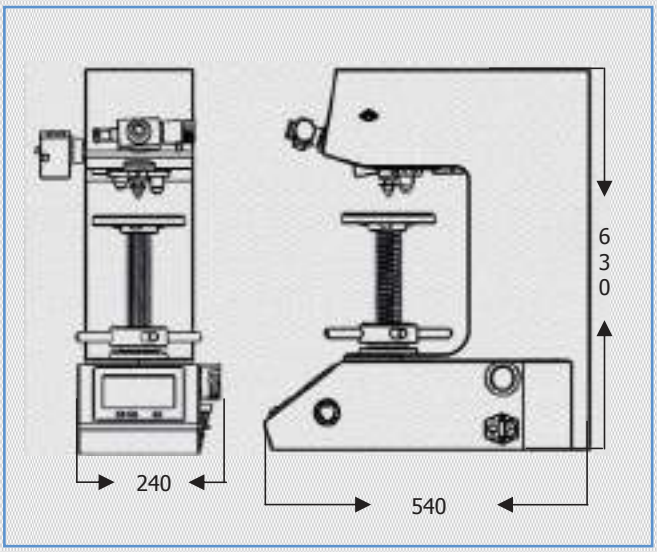

Specifications

Commodity		Digital Auto-Turret Vickers Hardness Tester			
Model		WH0503	WH1005	WH3010	WH5010
Code#		821-221	821-241	821-261	821-281
Loading Force	Kgf	0.3, 0.5, 1.0, 2.0, 3.0, 5.0	0.5, 1.0, 2.0, 3.0, 5.0, 10.0	1.0, 3.0, 5.0, 10.0, 20.0, 30.0	1.0, 5.0, 10.0, 20.0, 30.0, 50.0
	N	2.94, 4.9, 9.8, 19.6, 29.4, 49.0	4.9, 9.8, 19.6, 29.4, 49.0, 98.0	9.8, 29.4, 49.0, 98.0, 196, 294	9.8, 49.0, 98.0, 196, 294, 490
Objective		10×, 40×	10×, 40×	10×, 40×	10×, 20×
Magnification		100×, 400×	100×, 400×	100×, 400×	100×, 200×
Hardness Range		1HV-2967HV			
Turret		Automatic			
Data Input		Automatic			
Dwell Time		1-60s adjustable			
Resolution		0.1HV			
Max. Height of Specimen		≤170mm			
Instrument Throat		≤135mm			
Power Supply		AC 220V, 50Hz			
Dimension		(540*240*630)mm			
Packing Dimension		(620*485*800)mm			
Gross / Net Weight		95Kg/80Kg			

Partial Display

Upgraded Video Vickers Hardness Tester

Product Features

- Vickers Hardness Testers with linear displacement lifting structure for the weight loading system.
- Precise Six-Class dead weight system from 0.5Kgf to 10Kgf, and automatic loading, dwelling, and unloading during the testing process.
- Stable automatic turret with 3-working-position, MacroVickers diamond indenter, 10x and 40x objective are installing on one focal plane.
- High-definition optical path with 5MPixel Camera makes the hardness indention sharply, the video magnification is over than 2000x, it makes the measurement of small indention easily.
- Motorized X-Y platform with metal size 110x100mm and measuring stoke is 50x50mm, it can be programmed to test the Vickers hardness of specimen automatically.
- Powerful automatic Vickers testing software ATS-100 with smart testing functions.
- Windows operating system, Word, Excel, PDF and other Customized output reports are available.

Working Cupboard

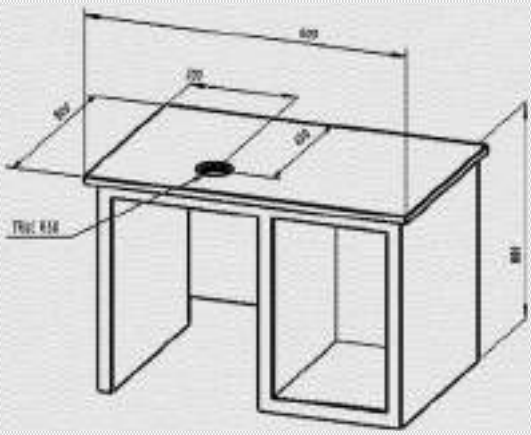

Specifications

Commodity		Automatic Vickers Hardness Tester			
Model		AutoVicky ZHV-WH0503	AutoVicky ZHV-WH1005	AutoVicky ZHV-WH3010	AutoVicky ZHV-WH5010
Code#		821-170-0503	821-170-1005	821-170-3010	821-170-5010
Loading Force	Kgf	0.3, 0.5, 1.0, 2.0, 3.0, 5.0	0.5, 1.0, 2.0, 3.0, 5.0, 10.0	1.0, 3.0, 5.0, 10.0, 20.0, 30.0	1.0, 5.0, 10.0, 20.0, 30.0, 50.0
	N	2.94, 4.9, 9.8, 19.6, 29.4, 49.0	4.9, 9.8, 19.6, 29.4, 49.0, 98.0	9.8, 29.4, 49.0, 98.0, 196, 294	9.8, 49.0, 98.0, 196, 294, 490
Objective		10×, 40×	10×, 40×	10×, 40×	10×, 20×
Magnification		100×, 400×	100×, 400×	100×, 400×	100×, 200×
Hardness Range		1HV-2967HV			
Turret		Automatic			
Data Input		Automatic			
Dwell Time		1-60s adjustable			
Resolution		0.1HV			
Max. Height of Specimen		≤170mm			
Instrument Throat		≤135mm			
Power Supply		AC 220V,50Hz			
Dimension		(540*240*630)mm			
Packing Dimension		(620*485*800)mm			
Gross / Net Weight		95Kg/80Kg			

Partial Display

Product Features

Vickers method is based on an optical measurement system, it specifies a range of light loads using a diamond indenter to make an indentation which is measured and converted to a hardness value. It is very useful for testing on a wide type of materials, but test samples must be polished to enable measuring the size of the impressions. A square base pyramid shaped diamond is used for testing in the Vickers scale. Typically MicroVickers loads are very light, ranging from 10gm to 1kgf, MacroVickers loads can range up to 50Kgf.

Micro Vickers hardness methods are used to test on metals, ceramics, and composites - almost any type of material. Since the test indentation is very small in a Vickers test, it is useful for a variety of applications: testing very thin materials like foils or measuring the surface of a part, small parts or small areas, measuring individual microstructures, or measuring the depth of case hardening by sectioning a part and making a series of indentations to describe a profile of the change in hardness.

Sinowon AutoVicky ZHV-1050AF uses one controller and one PC to control two Hardness testers, one is AutoVicky ZVK-1000F Automatic micro Vickers and Knoop hardness tester with autofocus-system, another is AutoVicky ZHV-50A Automatic Macro Vickers hardness tester Both two-unit have equips with the motorized X-Y auto-stage, it has auto-measurement about the indentation of Vickers and Knoop, and it can make measurement of case depth automatically, it eliminates human operation error, largely improves working efficiency, makes hardness testing measurement more accurate and uncomplicated.

- Auto-stage, Auto-focus, Auto-measurement and Vickers hardness testing system;
- Loading-force: Precise dead weights ensures the loading force system reliably and precisely;
- Auto-Measurement: automatic hardness testing and measurement software : 3A can control hardness tester and data communication, includes the switch of 10x, 20x, 40x, 60x objectives and Vickers indenter, auto loading, dwell and unloading, single or multiple indentation, set step distance, movement mode, auto record indentation dialog line and hardness value, auto generate CHD depth and hardness curve, error statistics, test times group statistics, generate Excel and Word format report.

Specifications

Commodity		Automatic Micro&Macro Vickers and Knoop Hardness Tester
Model		AutoVicky ZVK-1050AF
Code#		822-340AF
Focus-Mode		MicroVickers/Knoop: Twin Auto-focus/Manual-focus; MarcoVickers: Manual-focus
Load-System		High-precision-weight
Micro Load	gf	10, 25, 50, 100, 200, 300, 500, 1000
	mN	98.07, 245.2, 490.3, 980.7, 1961, 2942, 4903, 9807
Macro Load	Kgf	1, 2, 3, 5, 10, 20, 30, 50
	N	9.807, 19.614, 29.421, 49.035, 98.07, 196.14, 294.21, 490.35
Loading-Mode		Automatic loading, dwell and unloading
Dwell Time		5 ~ 99s can be adjustable
Turret System		Auto-Turret
Dual Optical Microscopy System		High-resolution Optical Microscopy Path ; 10x digital measuring eyepiece ; 10x, 40xobjective for MicroVickers/Knoop measurement ; 10x, 20xobjective for MarcoVickers measurement ; 0.5x C-mount with camera for dual vision measurement
Magnification		Optical measurement magnification:100x, 200x, 400x(10x, 20x, 40x Objective and 10x Eyepiece)
		Digital measurement magnification: 350x, 700x, 1400x
Light Source		LED parallel Illuminator
Digital Image System		0.5x C-adapter and 1.3Mpixel CMOS camera
Max. Specimen Height		90mm
Max. Specimen Depth		110mm
Hardness Scale		HV, HK
Auto-Stage	Type	Motorized
	Dimensions	(200 *180) mm
	X-Y Travel	(100*100) mm
	Motorized	Step motor
	Resolution	0.5um
Driving Controller		VickyControl2000
Hardness Testing Software		3A: Auto-stage; Auto-focus; Auto-measurement
PC system		DELL OptiPlex3046MT
LCD monitor		21.5" Dell LCD Monitor
Net Weight		150Kg
Power Supply		AC 220V/50Hz or 110V/60 Hz

Partial Display

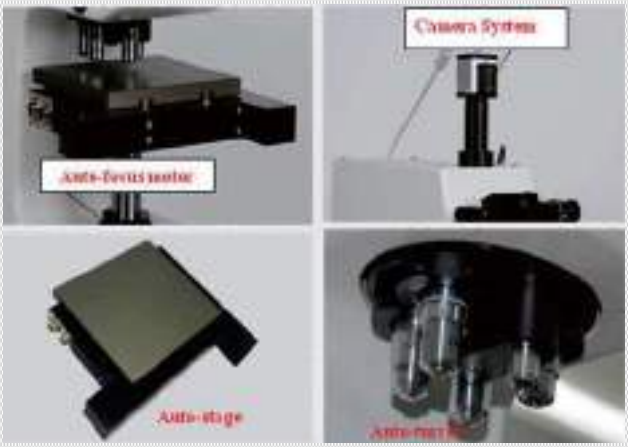

Automatic Measurement Software

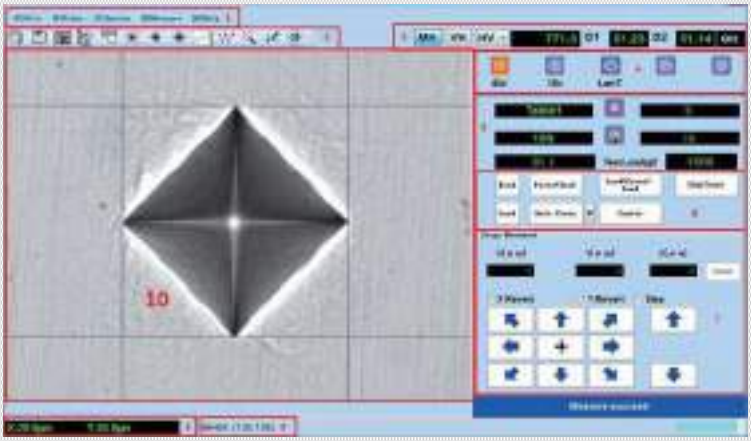

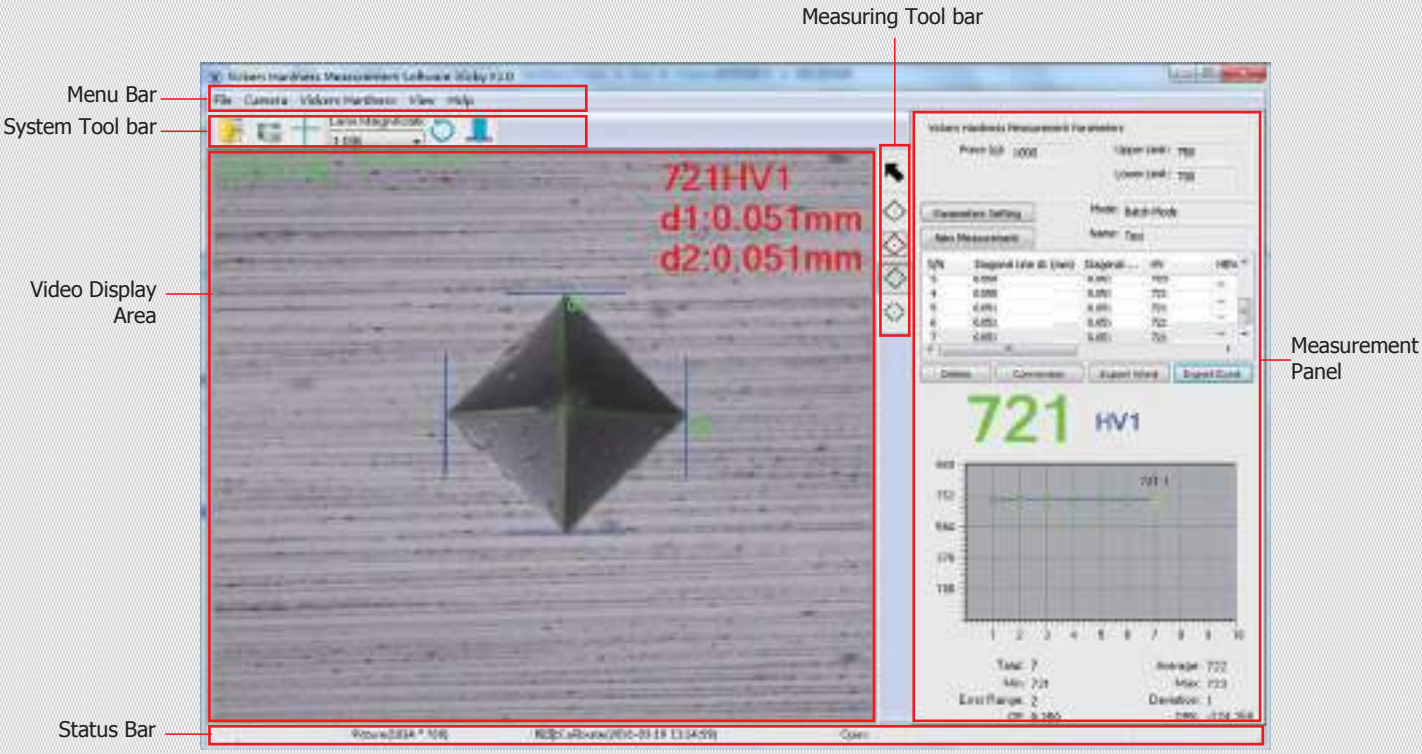

Calibration Measurement

Data Export

Product Introduction

Sinowon new generation vickers/knoop measurement software with friendly operation interface, apply USB camera to fast capture video and images, supports case depth inspection by analyzing the indentation image.
In traditional way, operators judge the size of the indentation through the microscopes, due to vision errors, different operators obtain different measurement results for same indentation, while by software, then indentation is enlarged through high resolution lens, and the size of indentation can be automatically obtained by image processing algorithm, largely improve the accuracy and efficiency.

Product Features

- One-Key operation, easy and fast.
- Automatic image process technology, high accuracy and stable result.
- curve chart to display hardness results.
- Support English, Russian and Chinese operation language.
- Standard measurement parameters and user-defined parameter for selection.
- Supports hardness conversion.
- Support report generation by Word/Excel.

Hardness Block

- The hardness blocks are mainly applicable to test the accuracy and calibrate the different hardness testers.
- Conform to standard: ASTM & ISO & JB/T.
- Calibration certificate from Chinese Metrology Bureau is optional available.

Commodity	Specification	Code #	Uniformity	Roughness	Dimension(mm)	Standard
Vickers Hardness Block	(150-750)HV1	821-601	±3%HV	Ra=0.02um	Φ25x7	ASTM & ISO & JB/T
	(150-750)HV5	821-611	±3%HV	Ra=0.02um	Φ60x10	ASTM & ISO & JB/T
	(150-750)HV10	821-621	±2%HV	Ra=0.02um	Φ60x10	ASTM & ISO & JB/T
	(150-750)HV30	821-631				ASTM & ISO & JB/T

Hardness Indenter

Commodity	Code #	Commodity	Code #
Indenter HV	821-401	Indenter HK	821-411

Measuring Objective

Commodity	Code #	Commodity	Code #
5X Measuring Objective	821-301	20X Measuring Objective	821-321
10X Measuring Objective	821-311	40X Measuring Objective	821-341

Another Accessories

Auto-Turret(#821-481)
(Standard Delivery)

Digital Eyepiece(#821-351)
(Standard Delivery)

Universal Clamp(#821-791)
(Optional Accessories)

Wireless Printer(#821-361)
(Optional Accessories)

Toolbox(#821-901)
(Standard Delivery)

Horizontal thin rod sample holder (#821-781)
(Optional Accessories)

U P1-20

Manual
Ultrasonic Hardness Tester / P 01-04

Motorized
Ultrasonic Hardness Tester / P 05-06

Roller
Ultrasonic Hardness Tester / P 07-08

Extended / Short Manual Probe
Ultrasonic Hardness Tester / P 09-12

Portable Universal Dynasonic
Hardness Tester / P 13-18

Portable
Ultrasonic Durometer / P 19-20

➢ **Ultrasonic Hardness Tester**

P 21-28 / Accessories

Application

- Hardness measurement of flange edge and gear root stamping, mold, sheet, surface hardened tooth and gear groove, and taper part;
- Hardness measurement of axis , thin-wall pipe and container;
- Hardness measurement of wheels and turbine rotor;
- Hardness measurement of bit blade;
- Hardness measurement of welding parts;
- Measurement of certain aperture depth deep dent, convex mark greater radian, irregular plane;
- Hardness measurement of most ferrous metal ,nonferrous metals and other alloys in industrial production.

Microscopic Indentation	Quick Measurement	High Accuracy
Invisible with naked eye	Result in 2 seconds	HV: ±3% HV HR:±1.5HR

Product Introduction

- At present, there are kinds of methods for hardness measurement, commonly used like Brinell, Rockwell, Vickers, Leeb, etc. while the disadvantages are obvious for the above hardness measurement.
- Rockwell and Brinell with heavy loading force and big indentation, lead to serious destruction on sample surface.
- Vickers apply optical measurement, but only professional technicians can operate smoothly, impossible to measure hardness of heavy work piece, installed machinery and permanently assembled parts.
- Leeb hardness tester apply rebound and indirect method to measure hardness, easily lead to big deviation when convert to Birnell, Rockwell and Vickers scales.
- • Ultrasonic hardness tester SU-100 apply ultrasonic contact impedance method to do comparative hardness measurement for testing pieces, with advantages of high accuracy, efficiency, portable and easy operation.
- Ultrasonic hardness tester SU-100 is widely used to measure hardness of small forgings, cast material, weld inspection, heat affected zone, Ion-nitrided stamping dies and molds, forms, presses, thin walled parts, bearings, tooth flanks, etc.

Specifications

Commodity	Ultrasonic Hardness Tester
Model	SU-100
Code#	882-121
Probe	Standard manual: HP-2K; Optional manual Probe: HP-1K, HP-5K, HP-10K; Optional Motorized Probe: MP-300, MP-500, MP-800, MP-1000
Indenter	136°Vickers Diamond Indenter
Measuring Range	HB: 85-650; HV 80-1599; HRC 20-70; HRB: 41-100; HRA: 61-85.6HS: 34.2-97.3; Mpa: 255-2180N/mm
Accuracy	HV: ±3%HV; HRC: ±1.5HRC; HB: ±3%HB; HLD: ±5HLD
Measuring Direction	Support 360°
Measuring Scales	HV, HBK HRC, HLD
Language	English, Chinese
Data Display	Loading force, Testing-times, Testing result, Average, Maximum、Minimum、Deviation and Conversion scale.
Data Storage	To save 1000-groups of measuring data and 20-groups of calibration data
Hardness Indication	LCD display
Working Conditions	Temp: -10℃~50℃; Humidity: 30%~80%
Power Supply	Rechargeable lithium battery, battery 4.2V, 3200mAh
Dimension	(160*80*31)mm
Weight	500g(No Probe)

Optional Testing Stand

Application

Large LCD Display	Microscopic Indentation	Quick Measurement	Friendly Operation	Wireless Printer
3.2 " Color Screen	Invisible with naked eye	Result in 2 seconds	One Touch Operation	Printing and data transferring

Product Introduction

- SU-300H Manual Ultrasonic Hardness Tester is a classical portable durometer made by Sinowon group. It applies method of ultrasonic contact impedance to make hardness testing at the spot or in the laboratory.
- SU-300H manual ultrasonic hardness tester applies module design, which can work with manual probes HP-1K, HP-2K, HP-5K, HP-10K, can be used to test hardness of small forgings, cast material, weld inspection, heat affected zone, Ion-nitrided stamping dies and molds, forms, presses, thin walled parts, bearings, tooth flanks, etc.
- SU-300H can test hardness of ferrous metal, non ferrous metal and alloys, it is an ideal instrument, can test hardness of HRA, HRB, HRC, HV, HBW, HS on site, assembly line and lab.
- SU-300H can also be upgraded with motorized probes MP-300, MP-500, MP-800, MP-1000,then the function is same with SU-300M.

Optional Testing Stand

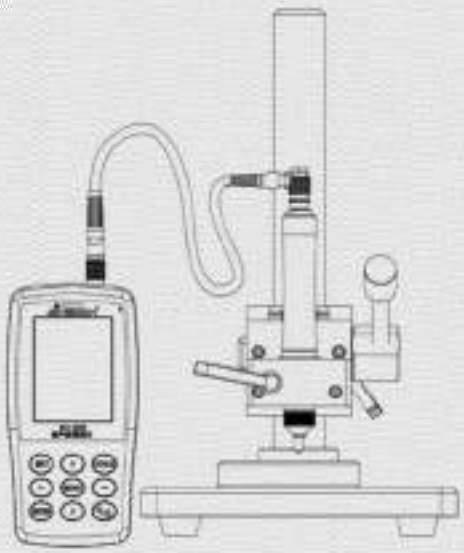

Specifications

Commodity	Manual Ultrasonic Hardness Tester				
Model	SU-300H				
Code#	882-141H				
Probe	Standard manual: HP-2K; Optional manual Probe: HP-1K, HP-5K, HP-10K; Optional Motorized Probe: MP-300, MP-500, MP-800, MP-1000				
Measuring Range(ASTM)	100-500HBS; 100-1500HV;20-68HRC; 55-100HRB; 60-85HRA; Mpa: 255-2180N/mm				
Measuring Accuracy (%)	Scales	‹ 250HV	250~500HV	500~800HV	› 800HV
	HV0.1	6	7	8	9
	HV0.3	6	7	8	9
	HV0.8	5	5	6	7
	HV1	5	5	6	7
	HV5	5	5	5	5
	HV10	5	5	5	5
Hardness Scales	Vickers(HV); Rockwell C(HRC); Rockwell A(HRA); RockwellB(HRB); Brinell(HB)				
LCD	3.2"Color Screen				
Data Display	Loading force,Testing-times, Testing result, Average, Maximum, Minimum, Deviation and Conversion scale.				
Language	Chinese, English, German, Portuguese, Turkish				
Data Output	USB Hyper Terminal/Bluetooth Printer				
Print	Bluetooth				
Data Storage	To save 1000-groups of measuring data and 20-groups of calibration data				
Word Input	Numbers and Letters				
Working Environment	Temperature: -10°C to 50°C ; Humidity: 30%-80% R.H.				
Battery Voltage	Rechargeable lithium battery; Voltage: 4.2V, 3200mAh				
Recharger Voltage	AC220V/50Hz, 110V/60Hz				
Main unit Dimension and Weight	Main unit Dimension: (160*80*31)mm (L x W x H); Manual Probe: Φ22×153mm ; Weight(No Probe): 0.5Kg				
Packing Dimension and Weight	Packing Dimension: (400*320*150)mm (L x W x H) ; Packing Weight (Standard Delivery): 5Kg				

Probe Install

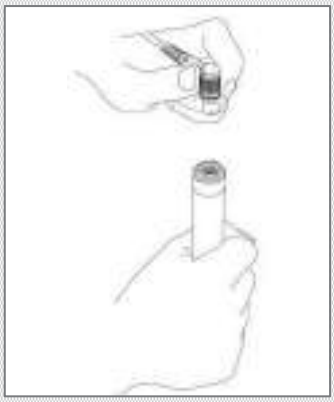

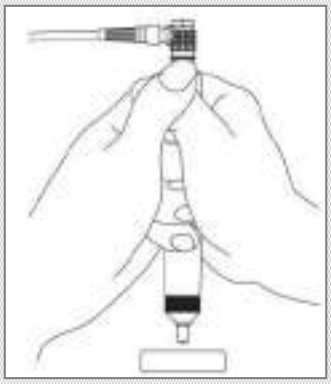

Application

Large LCD Display	Microscopic Indentation	Quick Measurement	Friendly Operation	Wireless Printer
3.2 " Color Screen	Invisible with naked eye	Result in 6 seconds	One Touch Operation	Printing and data transferring

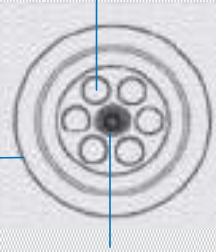

Product Introduction

- SU-300M electric ultrasonic hardness tester adopt building block System . It match with MP-300K,MP-500K , MP-800K,MP-1000K. To measure sample hardness of the roll, screw, such as wind power have plating, copper plating, carburi-zing, nitriding layer etc.
- SU-300M Motorized Ultrasonic Hardness Tester is a popular portable durometer made by Sinowon group. It applies method of ultrasonic contact impedance to make hardness testing at the spot or in the laboratory.
- SU-300M is a perfect portable durometer for hardness testing about the coating and plating, it can measure the hardness of chrome, copper plating, carburized layer and Nitriding layer effectively.
- SU-300M is a NDT durometer due to the contact indention is too small to observe, it is one of the excellent solution totest hardness of finished products, such as, the mold, gear, shaft, rod, screw, rails, etc.
- SU-300M can not only work with the motorized probes, but also work with the manual probes, which is able to meet the different application in light of different condition of surface roughness.

Product Size

Specifications

Commodity	Motorized Ultrasonic Hardness Tester				
Model	SU-300M				
Code#	882-141M				
Probe	Standard MP-1000K; Optional manual Probe: HP-1K,HP-2K,HP-5K, HP-10K; Optional Motorized Probe: MP-300K, MP-500K, MP-800K				
Measuring Range(ASTM)	100-500HBS; 100-1500HV;20-68HRC; 55-100HRB; 60-85HRA; Mpa: 255-2180N/mm				
Measuring Accuracy (%)	Scales	‹ 250HV	250~500HV	500~800HV	› 800HV
	HV0.1	6	7	8	9
	HV0.3	6	7	8	9
	HV0.8	5	5	6	7
	HV1	5	5	6	7
	HV5	5	5	5	5
	HV10	5	5	5	5
Hardness Scales	Vickers(HV);Rockwell C(HRC); Rockwell A(HRA); RockwellB(HRB); Brinell(HB)				
LCD	3.2"Color Screen				
Data Display	Loading force, Testing-times, Testing result, Average, Maximum, Minimum, Deviation and Conversion scale.				
Language	Chinese, English, German, Portuguese, Turkish				
Data Output	USB Hyper Terminal/Bluetooth Printer				
Print	Bluetooth				
Data Storage	To save 1000-groups of measuring data and 20-groups of calibration data				
Word Input	Numbers and Letters				
Working Environment	Temperature: -10°C to 50°C; Humidity: 30%-80% R.H.				
Battery Voltage	Rechargeable lithium battery ; Voltage: 4.2V, 3200mAh				
Recharger Voltage	AC220V/50Hz, 110V/60Hz				
Main unit Dimension and Weight	Main unit Dimension: (160*80*31)mm(L x W x H); Manual Probe: Φ22×153mm ; Weight(No Probe): 0.5Kg				
Packing Dimension and Weight	Packing Dimension: (400*320*150)mm(L x W x H) ; Packing Weight (Standard Delivery): 5Kg				

Probe Install

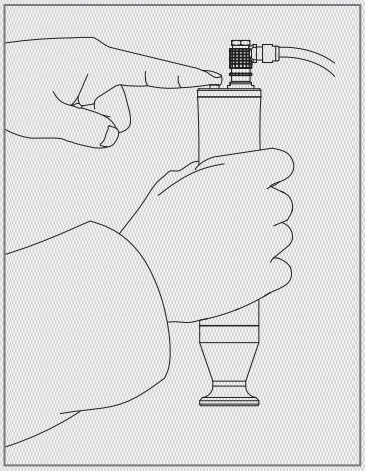

Application

Large LCD Display	Microscopic Indentation	Quick Measurement	Friendly Operation	Wireless Printer
3.2 " Color Screen	Invisible with naked eye	Result in 6 seconds	One Touch Operation	Printing and data transferring

Product Introduction

- SU-320R Roller Motorized Ultrasonic Hardness Tester is a professional portable durometer made by Sinowon group. It applies method of ultrasonic contact impedance to make hardness testing of copper plating and chrome in the workshop of Rotogravure industry.
- SU-320R standard motorized probe is MP-300 with 3N testing force. 2N motorized probe is option available if the chrome coating thickness is less tan 15um.

Product Features

- Perfect Accuracy——±3% HV, ±1.5HR, ±3%HB.
- Microscopic Indentation—— Only microscope can observe the indentation.
- Quick Measurement——Result in 6 seconds.
- Large LCD Display——Directly display measurement result, times count, maximum, minimal, average and deviation.
- Friendly Operation——Operate well after short training.
- Mass Storage——Save 1000 groups measurement data.
- Simple Calibration——Save 20 groups calibration data for invoking, improve calibration efficiency.

Specifications

Commodity	Roller Ultrasonic Hardness Tester				
Model	SU-320R				
Code#	882-141R				
Probe	Standard 3N Motorized Probe				
Measuring Range(ASTM)	100-1500HV; 20-68HRC				
Measuring Accuracy (%)	Scales	‹ 250HV	250~500HV	500~800HV	› 800HV
	HV0.3	±3%	±3%	±3%	±3%
Hardness Scales	Vickers(HV); Rockwell C(HRC); Rockwell A(HRA); RockwellB(HRB); Brinell(HB)				
LCD	3.2"Color Screen				
Data Display	Loading force, Testing-times, Testing result, Average, Maximum, Minimum, Deviation and Conversion scale.				
Language	Chinese, English, German, Portuguese, Turkish				
Data Output	USB Hyper Terminal/Bluetooth Printer				
Print	Bluetooth				
Data Storage	To save 1000-groups of measuring data and 20-groups of calibration data				
Word Input	Numbers and Letters				
Working Environment	Temperature: -10°C to 50°C; Humidity: 30%-80% R.H.				
Battery Voltage	Rechargeable lithium battery; Voltage: 4.2V, 3200mAh				
Recharger Voltage	AC220V/50Hz, 110V/60Hz				
Main unit Dimension and Weight	Main unit Dimension: (160*80*31)mm; Weight: 500g (No Probe)				
Packing Dimension and Weight	Packing Dimension: (400*320*150)mm; Packing Weight: 5Kg				

Testing Stand

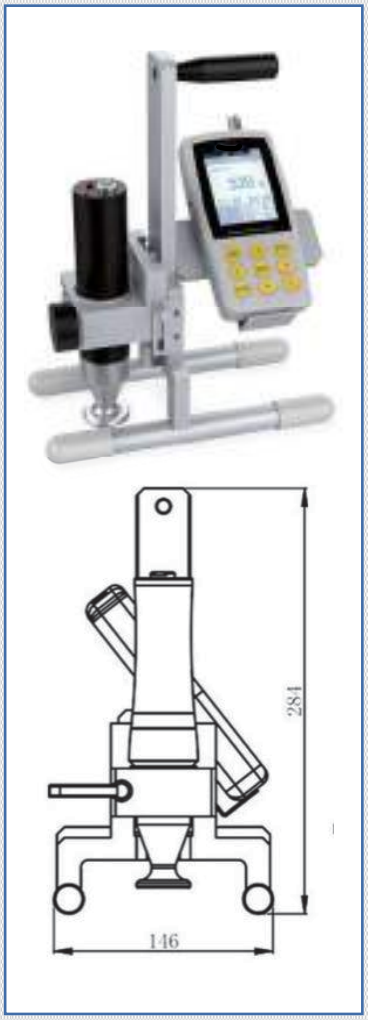

Application

Large LCD Display
3.2 " Color Screen

Microscopic Indentation
Invisible with naked eye

Quick Measurement
Result in 2 seconds

Friendly Operation
One Touch Operation

Wireless Printer
Printing and data transferring

Product Introduction

- SU-300C Lengthened Ultrasonic Hardness Tester is a special manual portable durometer with Lengthened probe HP-1C made by Sinowon group. It applies method of ultrasonic contact impedance to make hardness testing at the spot.
- SU-330C is a NDT durometer due to the contact indention is too small to observe, it is one of the excellent solution to test hardness of finished products, such as, the deep hole of mold, the tooth of gear,inclined plane of rails, etc.
- SU-330C with extended probe used to test hardness of gear and deep hole specimen, under extreme space limitation or on the floor of grooves.

Specifications

Commodity	Extended Manual Probe Ultrasonic Hardness Tester				
Model	SU-330C				
Code#	882-141C				
Probe	Standard 10N: HP-1C; Optional 20N: HP-2C				
Measuring Range(ASTM)	20-68HRC; 55-100HRB; 60-85HRA; 100-500HBS; 100-1500HV; Mpa: 255-2180N/mm				
Measuring Accuracy (%)	Scales	‹ 250HV	250~500HV	500~800HV	› 800HV
	HV1	5	5	6	7
	HV2	5	5	6	7
Hardness Scales	Vickers(HV); Rockwell C(HRC); Rockwell A(HRA); RockwellB(HRB); Brinell(HB)				
LCD	3.2"Color Screen				
Data Display	Loading force, Testing-times, Testing result, Average, Maximum, Minimum, Deviation and Conversion scale.				
Language	Chinese, English, German, Portuguese, Turkish				
Data Output	USB Hyper Terminal/Bluetooth Printer				
Print	Bluetooth				
Data Storage	To save 1000-groups of measuring data and 20-groups of calibration data				
Word Input	Numbers and Letters				
Working Environment	Temperature: -10°C to 50°C ; Humidity: 30%-80% R.H.				
Battery Voltage	Rechargeable lithium battery; Voltage: 4.2V, 3200mAh				
Recharger Voltage	AC220V/50Hz, 110V/60Hz				
Main unit Dimension and Weight	Main unit Dimension: (160*80*31)mm(L x W x H); Manual Probe: Φ22×153mm ; Weight(No Probe): 0.5Kg				
Packing Dimension and Weight	Packing Dimension: (400*320*150)mm(L x W x H) ; Packing Weight (Standard Delivery): 5Kg				

Probe Size

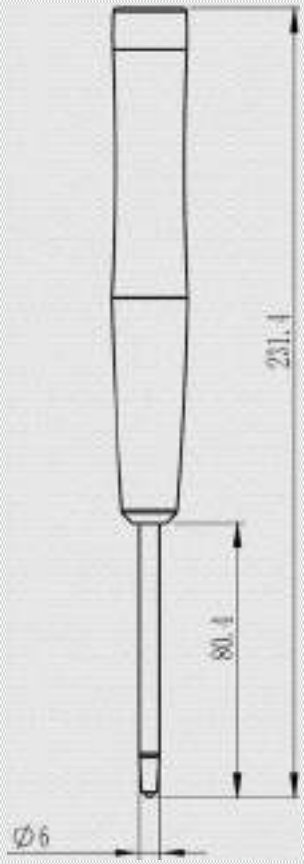

Application

Large LCD Display
3.2 " Color Screen

Microscopic Indentation
Invisible with naked eye

Quick Measurement
Result in 2 seconds

Friendly Operation
One Touch Operation

Wireless Printer
Printing and data transferring

Product Introduction

- SU-340T Shorten Ultrasonic Hardness Tester is a special manual portable durometer with shorten probe HP-1T made by Sinowon group. It applies method of ultrasonic contact impedance to make hardness testing at the spot.
- SU-340T is a NDT durometer due to the contact indention is too small to observe, it is one of the excellent solution to test hardness of inner wall, such as, engine, pressure vessel, pipeline, etc.
- SU-340T equips with short probe, it can non-destructively measure hardness of internal wall of tube, also called Tube Hardness Tester、Inner Wall Hardness Tester.

Specifications

Commodity	Short Manual Probe Ultrasonic Hardness Tester				
Model	SU-340T				
Code#	882-141T				
Probe	Standard 10N: HP-1T; Optional 20N: HP-2T				
Measuring Range(ASTM)	20-68HRC; 55-100HRB; 60-85HRA; 100-500HBS; 100-1500HV; Mpa: 255-2180N/mm				
Measuring Accuracy (%)	Scales	‹ 250HV	250~500HV	500~800HV	› 800HV
	HV1	5	5	6	7
	HV2	5	5	6	7
Hardness Scales	Vickers(HV); Rockwell C(HRC); Rockwell A(HRA); RockwellB(HRB); Brinell(HB)				
LCD	3.2"Color Screen				
Data Display	Loading force, Testing-times, Testing result, Average, Maximum, Minimum, Deviation and Conversion scale.				
Language	Chinese, English, German, Portuguese, Turkish				
Data Output	USB Hyper Terminal/Bluetooth Printer				
Print	Bluetooth				
Data Storage	To save 1000-groups of measuring data and 20-groups of calibration data				
Word Input	Numbers and Letters				
Working Environment	Temperature: -10°C to 50°C ; Humidity: 30%-80% R.H.				
Battery Voltage	Rechargeable lithium battery; Voltage: 4.2V, 3200mAh				
Recharger Voltage	AC220V/50Hz, 110V/60Hz				
Main unit Dimension and Weight	Main unit Dimension: (160*80*31)mm(L x W x H); Manual Probe: Φ22×153mm ; Weight(No Probe): 0.5Kg				
Packing Dimension and Weight	Packing Dimension: (400*320*150)mm(L x W x H) ; Packing Weight (Standard Delivery): 5Kg				

Probe Size

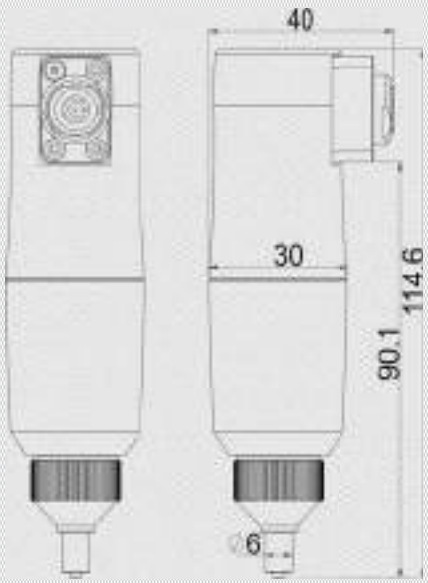

Application

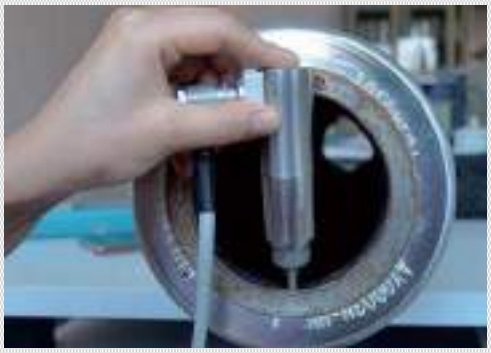

One Instrument with Two Applications

Integrate Dynamic and Static Methods

Product Introduction

- SU-400 Dynasonic Hardness Tester is a universal portable durometer with twin—testing-method. It applies twin-method about state ultrasonic contact impedance: UCI and dynamic rebound: Leeb to make hardness testing in one instrument, it solves the dilemma that Leeb method can not test the hardness of plating and coating(in UCI), and UCI method can not test the coarse crystal material in the casting industry(in Leeb).
- SU-400 can not only work with the UCI motorized and manual probes, but also work with the Leeb impact probe, it is universal to test the hardness of material with the fine crystal structure or coarse crystal structure in the metal industry.
- SU-400 UCI probe system is perfect to measure hardness testing about the coating and plating, which can measure the hardness of chrome, copper plating, carburized layer and Nitriding layer effectively.
- SU-400 dynamic Leeb probe system is suitable to measure hardness of coarse material, such as, casting and forging.
- SU-400 is a NDT durometer due to the contact indention is too small to observe, it is one of the excellent solution to test hardness of finished products, such as, the mold, gear, shaft, rod, screw, rails, etc.

Motorized Probe

Specifications

Commodity	Portable Manual Universal Dynasonic Hardness Tester	Portable Motorized Universal Dynasonic Hardness Tester
Model	SU-400H	SU-400M
Code#	882-151H	882-151M
Ultrasonic Probe	Optional manual Probe: HP-1K, HP-2K, HP-5K, HP-10K; Optional Motorized Probe: MP-300, MP-500, MP-800, MP-1000	
Impact Devices	Standard delivery: D(optional DC, DL, D+15, C, G)	
Hardness Scales	HL, HV, HB, HRC, HRB, HRA, HS, etc.	
Measuring Range	50~1500HV; 20～68HRC; 76～600HB; 41～105HRB; 170～960HLD	
Measuring Accuracy	HV: ±3%HV; HRC: ±1.5HRC; HB: ±3%; HB; HL: ±8HL	
Resolution	0.1HR, 1HV, 1HB, 1HLD, 0.1HS	
LCD	3.2"Color Screen	
Data Display	Loading force, Testing-times, Testing result, Average, Maximum, Minimum, Deviation and Conversion scale.	
Print	Bluetooth	
Data Storage	To save 1000-groups of measuring data and 20-groups of calibration data	
Working Environment	Temperature: -10°C to 50°C ; Humidity: 30%-80% R.H.	
Continuous Working Period	10h(turn off the back light)	
Operating Voltage	4.2V	
Dimension	(160*80*31)mm	
Weight	≤500g(probe not included)	

Structure of impact D

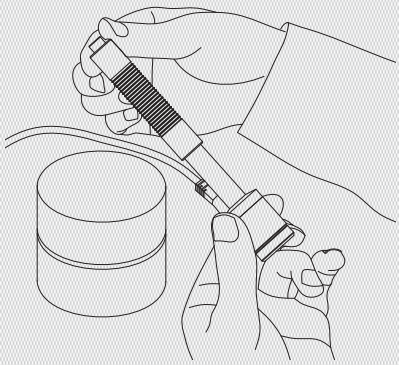

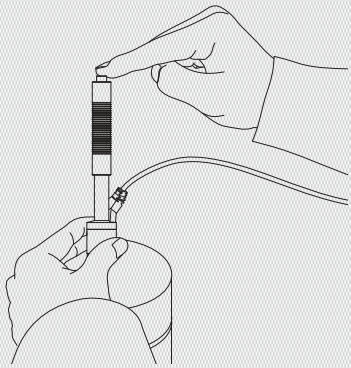

Application

One Instrument with Two Applications

Integrate Dynamic and Static Methods

Product Introduction

- SU-410DH Dynasonic Hardness Tester is a universal portable durometer with twin—testing-method. It applies twin-method about state ultrasonic contact impedance: UCI and dynamic rebound: Leeb to make hardness testing in one instrument, it solves the dilemma that Leeb method can not test the hardness of plating and coating(in UCI), and UCI method can not test the coarse crystal material in the casting industry(in Leeb).
- SU-410DH can not only work with the UCI manual probes, but also work with the Leeb impact probe, it is universal to test the hardness of material with the fine crystal structure or coarse crystal structure in the metal industry.
- SU-410DH UCI probe system is perfect to measure hardness testing about the coating and plating, which can measure the hardness of chrome, copper plating, carburized layer and Nitriding layer effectively.
- SU-410DH dynamic Leeb probe system is suitable to measure hardness of coarse material, such as, casting and forging.
- SU-410DH is a NDT durometer due to the contact indention is too small to observe, it is one of the excellent solution to test hardness of finished products, such as, the mold, gear, shaft, rod, screw, rails, etc.

Optional Impact Devices

Specifications

Commodity	Portable Manual Ultrasonic Hardness Tester
Model	SU-410DH
Code#	882-151DH
Probe	Manual Probe 20N: HP-2K
Impact Devices	Optional delivery: D, DC, DL, D+15, C, G)
Hardness Scales	HL, HV, HB, HRC, HRB, HRA, HS, etc.
Measuring Range	50~1500HV; 20～68HRC; 76～600HB; 41～105HRB; 170～960HLD
Measuring Accuracy	HV: ±3%HV; HRC: ±1.5HRC; HB: ±3%HB; HL: ±8HL
Resolution	0.1HR, 1HV, 1HB, 1HLD, 0.1HS
LCD	3.2"Color Screen
Data Display	Loading force, Testing-times, Testing result, Average, Maximum, Minimum, Deviation and Conversion scale.
Print	Bluetooth
Data Storage	To save 1000-groups of measuring data and 20-groups of calibration data
Working Environment	Temperature: -10°C to 50°C ; Humidity: 30%-80% R.H.
Continuous Working Period	6h(turn off the back light)
Operating Voltage	4.2V
Dimension	(160*80*31)mm
Weight	1.2Kg

Accessories

Manual Probe

Impact Devices

Application

One Instrument with Two Applications

Integrate Dynamic and Static Methods

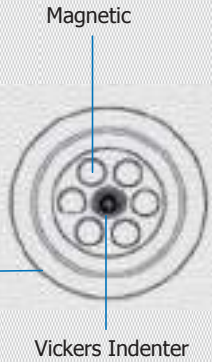

Product Introduction

- SU-410DM Dynasonic Hardness Tester is a universal portable durometer with twin—testing-method. It applies twin-method about state ultrasonic contact impedance: UCI and dynamic rebound: Leeb to make hardness testing in one instrument, it solves the dilemma that Leeb method can not test the hardness of plating and coating(in UCI), and UCI method can not test the coarse crystal material in the casting industry(in Leeb).
- SU-410DM can not only work with the UCI motorized probes, but also work with the Leeb impact probe, it is universal to test the hardness of material with the fine crystal structure or coarse crystal structure in the metal industry.
- SU-410DM UCI probe system is perfect to measure hardness testing about the coating and plating, which can measure the hardness of chrome, copper plating, carburized layer and Nitriding layer effectively.
- SU-410DM dynamic Leeb probe system is suitable to measure hardness of coarse material, such as, casting and forging.
- SU-410DM is a NDT durometer due to the contact indention is too small to observe, it is one of the excellent solution to test hardness of finished products, such as, the mold, gear, shaft, rod, screw, rails, etc.

Optional Impact Devices

Specifications

Commodity	Portable Motorized Ultrasonic Hardness Tester
Model	SU-410DM
Code#	882-151DM
Probe	Motorized Probe 20N: MP-2000
Impact Devices	Optional delivery: D, DC, DL, D+15, C, G)
Hardness Scales	HL, HV, HB, HRC, HRB, HRA, HS, etc.
Measuring Range	50~1500HV; 20～68HRC; 76～600HB; 41～105HRB; 170～960HLD
Measuring Accuracy	HV: ±3%HV; HRC: ±1.5HRC; HB: ±3%HB; HL: ±8HL
Resolution	0.1HR, 1HV, 1HB, 1HLD, 0.1HS
LCD	3.2"Color Screen
Data Display	Loading force, Testing-times, Testing result, Average, Maximum, Minimum, Deviation and Conversion scale.
Print	Bluetooth
Data Storage	To save 1000-groups of measuring data and 20-groups of calibration data
Working Environment	Temperature: -10°C to 50°C ; Humidity: 30%-80% R.H.
Continuous Working Period	6h(turn off the back light)
Operating Voltage	4.2V
Dimension	(160*80*31)mm
Weight	1.2Kg

Accessories

Motorized Probe

Impact Devices

Application

Microscopic Indentation	Quick Measurement	High Accuracy
Invisible with naked eye	Result in 2 seconds	HV: ±3% HV HR:±1.5HR

Product Introduction

- SVR-110 is a special manual portable durometer with manual probe HP-1K by Sinowon group. It applies method of ultrasonic contact impedance to make hardness testing at the spot.
- SVR-110 is a NDT durometer due to the contact indention is too small to observe, it is one of the excellent solution to test hardness of finished products, such as, the mold, gear, shaft, rod, screw, rails, etc.

Product Features

- **High Accuracy :** HV: ±3% HV , HR:±1.5HR, Conform internal standard ASTM A1038, DIN50159. ;
- **Microscopic Indentation :** The indention size of SVR-110 is same with HV1 of micro hardness testing in one specimen , it is too small to observe by eyes, it is a non-destructive method for the specimen.
- **Qucik Measurement :** In 2 seconds to get hardness value, working efficiency is 60 times higher than normal bench hardness testers.

Specifications

Commodity	Portable Ultrasonic Durometer
Model	SVR-110H
Code#	882-110
Testing force	Manual 10N
Hardness Range	HV 80-1599; HRC 20-70;
Accuracy	±3% HV; HR: ±1.5HR
Measuring Scales	HV/HRC
Language	English, Chinese
Data Output	RS232
Data Saving	20-group calibration data, 1000-group measurement data
Working Conditions	Temp: -10℃~50℃; Humidity: 30%~80%
Power Supply	Rechargeable lithium battery, battery 4.2V, 3200mAh
Rechargeable Voltage	AC220V/50Hz, 110V/60Hz
Dimension	(160*80*31)mm
Weight	500g(No Probe)

Optional Testing Stand

Application

Product Introduction

- Introduced latest ultrasonic sensor technology.
- Obtain accurate hardness value without auxiliary devices.
- Support 360° quick measuring.
- Excellent human engineering design easy to hold.
- Suitable dimension and weight of probe is convenient to control.
- Quick and accurate measuring for edge and fixed position of specimen.
- Micro indentation, Non- Destructive for specimen.

Specifications

Probe Type	HP-1K	HP-2K	HP-5K	HP-10K
Code#	882-311	882-321	882-331	882-341
Loading Force	10N	20N	50N	98N
Diameter	22mm	22mm	22mm	22mm
Length	154mm	154mm	154mm	154mm
Oscillating Rod Diameter	2.4mm	2.4mm	3mm	3mm
Roughness of measuring surface	Ra<3.2um	Ra<5um	Ra<10um	Ra<15um
Min weight of test material	0.3kg	0.3kg	0.3kg	0.3kg
Min thickness of test material	2mm	2mm	2mm	2mm

Drawings of Probe

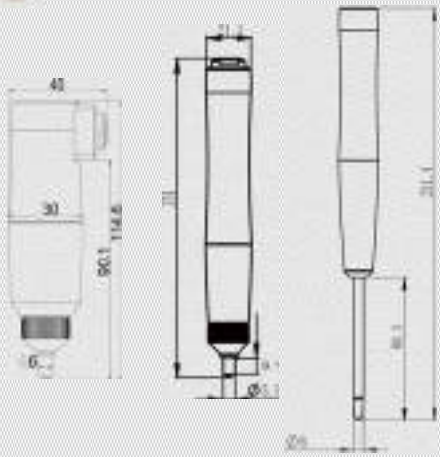

Testing Stand

MU-100/MU-200H/MU-300H testing stand is applicable with ultrasonic hardness tester for the accurate measurement.

Commodity	Stationary Stand of Manual Probe	Portable Stand of Rotogravure roller	Portable Magnetic Testing Stand
Model	MU-100	MU-200H	MU-300H
Code#	882-301	882-201H	882-101H
Material	Stainless Steel	Magnesium aluminum alloy	Aluminum
Weight	8.8Kg	1.6Kg	4.5Kg
Dimension (LxWxH)(mm)	200*200*332	205*142*284	200*120*348
Packing Dimension (LxWxH)(mm)	320*320*440	350*200*350	398*310*540

MU-100

MU-200H

MU-300M

Support Ring

Support Ring Name	Plan Support Ring	Small Cylinder Support Ring	Big Cylinder Support Ring
Code#	882-511	882-521	882-531
Application	Plan Test Piece	Diameter 8-22mm Test Piece	Diameter 16-80mm Test Piece

Plan Support Ring

Small Cylinder Support Ring

Big Cylinder Support Ring

Motorized Probe MP Series

Product Introduction

- Introduced latest ultrasonic sensor technology
- Obtain accurate hardness value without auxiliary devices
- Excellent ergonomic design easy to hold
- Quick and accurate measuring for edge and fixed position of specimen
- Micro indentation, no destructive for specimen
- Motorized control, one key fast measuring
- Eliminate hand shake error by manual probe, higher accuracy and repeatability
- More suitable for thin pieces, coating layer hardness

Specifications

Probe Type	MP-200	MP-300	MP-500	MP-800	MP-1000	MP-2000
Code#	882-211	882-221	882-231	882-241	882-251	882-261
Loading Force	2N	3N	5N	8N	10N	20N
Diameter	46mm	46mm	46mm	46mm	46mm	46mm
Length	197.5mm	197.5mm	197.5mm	197.5mm	197.5mm	197.5mm
Oscillating Rod Diameter	3.7mm	3.7mm	3.7mm	3.7mm	3.7mm	3.7mm
Roughness of measuring surface	0.3kg	0.3kg	0.3kg	0.3kg	0.3kg	0.3kg
Min weight of test material	2mm	2mm	2mm	2mm	2mm	2mm

Testing Stand

MU-200M/MU-300M/MU-400 in the laboratory, it must be used when Manual Probe calibrated.

Commodity	Portable Stand of Rotogravure roller	Portable Magnetic Testing Stand	Stationary Stand of Motorized Probe
Model	MU-200M	MU-300M	MU-400
Code#	882-201M	882-101M	882-401
Material	Magnesium aluminum alloy	Aluminum	Stainless Steel
Weight	1.6Kg	4.5Kg	8.5Kg
Dimension (LxWxH)(mm)	205*142*284	200*120*348	200*200*332
Packing Dimension (LxWxH)(mm)	350*200*350	398*310*540	398*398*530

MU-200M MU-300M MU-400

Hardness Block

Hardness Range	Code#	Uniformity	Roughness	Dimension
(28~63)HRC	882-611	±1.5HRC	Ra=0.02um	Ø90x16mm
(300~800)HV 1	882-651	±3%HV	Ra=0.02um	Ø90x16mm
(300~800)HV 5	882-661	±3%HV	Ra=0.02um	Ø90x16mm
(300~800)HV 10	882-671	±3%HV	Ra=0.02um	Ø90x16mm
(180~500)HB	882-681	±3%HB	Ra=0.02um	Ø90x16mm

Guidelines for selection and use of UCI instruments

Load	Model	Features	Typical Applications
98N	Standard length (manual)	Relatively large indentation; requires minimal surface preparation	Small forgings, cast material, weld inspection, HAZ
49 N	Standard length (manual) Extended length (manual) Short probe (manual)	For general use 30 mm extended length Reduced length (90 mm); electronics in separate housing	Induction hardened or carburized machine parts, for example, camshafts, turbine weld inspection, HAZ Measurement in grooves, on gear tooth flanks and roots Turbine blades, inside wall of pipes with Ø >90 mm
10N	Standard length (manual) Extended length (manual) Short probe (manual)	Load is easy to apply and provides control to test on sharp radii 30 mm extended length Reduced length (90 mm); electronics in separate housing	Ion-nitrided stamping dies and molds, forms, presses, thin walled parts Bearings, tooth flanks Turbine blades, inside wall of pipes with Ø >90 mm
20N	Motor probe style	Load is applied by servomotor	Finished precision parts, gears, bearing raceways
10N	Motor probe style	Load is applied by servomotor	Finished precision parts, gears, bearing raceways
8 N	Motor probe style	Load is applied by servomotor	Finished precision parts, gears, bearing raceways
3 N	Motor probe style	Load is applied by servomotor	Thin layers, for example, copper or chromium on steel cylinders; Copper rotogravure cylinders;Coatings, case hardened parts

The Allowable Maximum Surface Roughness for Sinowon UCI Probe at Difference Hardness: Ra(um)

Hardness/Probe	MP-200	MP-300	MP-500	MP-800	MP-1000	HP-1K	HP-2K	HP-5K	HP-10K
100HV	0.86	1.06	1.38	1.73	1.95	1.95	2.75	4.35	6.15
200HV	0.62	0.75	0.97	1.23	1.38	1.38	1.95	3.08	4.34
300HV	0.5	0.62	0.79	1.01	1.12	1.12	1.58	2.51	3.55
400HV	0.43	0.53	0.69	0.87	0.97	0.97	1.38	2.18	3.08
500HV	0.39	0.48	0.62	0.78	0.87	0.87	1.23	1.95	2.75
600HV	0.36	0.43	0.56	0.71	0.8	0.8	1.12	1.78	2.51
700HV	0.33	0.4	0.52	0.66	0.73	0.73	1.04	1.64	2.32
800HV	0.31	0.38	0.49	0.62	0.69	0.97	0.97	1.54	2.18
900HV	0.29	0.36	0.46	0.58	0.65	0.92	0.92	1.44	2.05
1000HV	0.28	0.33	0.43	0.55	0.62	0.62	0.87	1.38	1.95
1200HV	0.25	0.31	0.4	0.5	0.56	0.56	0.79	1.26	1.78

It is Ra value about surface roughness for Sinowon UCI probe at different hardness of material.

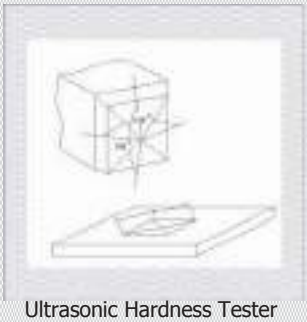

Ultrasonic Hardness Tester Indenter Illustration

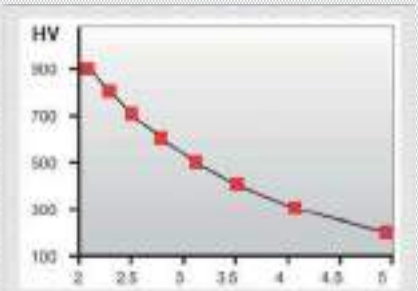

UCI Method: Hardness Value versus Frequency Shift

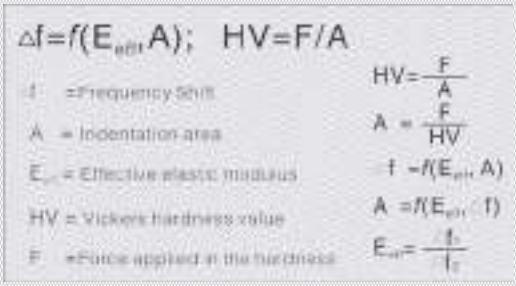

Ultrasonic Hardness Tester Calculation Formula

Accessories

Host silicone sleeve(#882-931)
(Standard Delivery)

Ultrasonic Trigger Motorized Probe
MP-T Series
(Optional Accessories)

Probe Protector (#882-711)
(Optional Accessories)

Rechargeable Batteries(#882-841)
(Standard Delivery)

Probe Protection Handle(#882-911)
(Optional Accessories)

Lengthened Probe Protector(#882-721)
(Optional Accessories)

USB Charger with Cable(#882-851)
(Standard Delivery)

V-shape Support Ring(#882-551)
(Optional Accessories)

SPC Software(#882-381)
(Optional Accessories)

Toolbox(#882-901)
(Standard Delivery)

Leeb Hardness Block(#882-630)
(Optional Accessories)

Bluetooth Receiver(#882-710)
(Optional Accessories)

Probe Cable(#882-801)
(Standard Delivery)

Type D Impact Devices(#882-410)
(Optional Accessories)

Bluetooth Printer (#882-361)
(Optional Accessories)

Comparison of indentation between ultrasonic and desk type hardness tester

The different indentions on one specimen have been tested by Brinell, Rockwell, Vickers and Ultrasonic hardness tester.

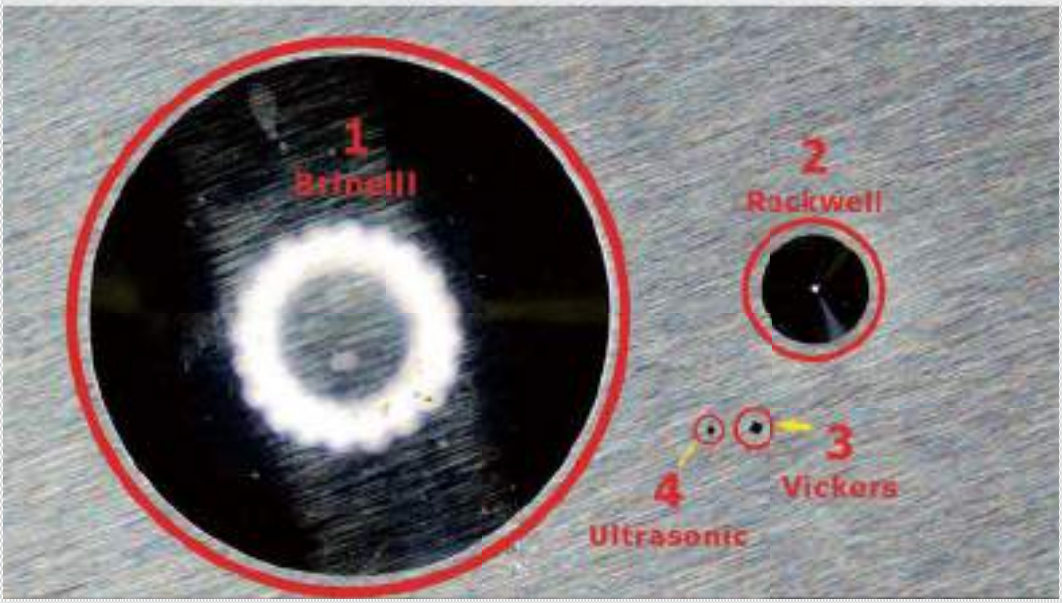

Comparison between ultrasonic and Leeb hardness tester

Hardness Tester	Leeb Hardness Tester	Ultrasonic Hardness Tester
Photo		
Mass of sample	The higher the sample quality, the more reliable the hardness value of the Leeb hardness tester, The minimum quality requirement is 3kg for high hardness sample and 1.5kg for low hardness sample. If the sample does not meet the requirements, it is necessary to improve the inertia of the sample by means of coupling or compression support, estimate the effective collision mass, calculate the center of mass and deflection angle of the non dense sample, and if the treatment is not proper, it will cause large errors.	For the thin and small workpiece with complex shape, it can be directly measured with different fitting blocks of probe, which avoids the steps of fixture design and measurement value conversion and correction.
Surface roughness of sample	------	The higher the surface roughness is, the greater the binding force of the surface on the indenter of the resonance rod is. The higher the frequency of the resonance rod is, the lower the measured value is, the greater the impact on the low hardness sample is, but the impact is not significant when RA ≤ 12.5um (del. 3 or above).
Thickness of sample	The thickness of the test part in the test direction required by the Leeb hardness test is not only to prevent penetration, but also to prevent the support due to the shape. If there is no support or the support mode is different, the specimen will change its elastic or plastic position when it receives the impact force, and the thickness is required to be ≥ 3mm	The required thickness is ≥ 10 times the penetration depth of the indentation. Under 1.2kg weight load, the corresponding indentation depth of 25-65hrc steel is about 14-7um, so it can be applied to very thin materials.
Curvature radius of sample	The hardness value of Leeb is closely related to the volume of materials involved in indentation formation. It is required that R ≥ 10 mm for convex sample and 15mm for concave sample	The measured value is related to the projection of the contact area of the indentation, and it is not affected by the curvature radius because of the measurement under load.

Customer list of ultrasonic hardness tester

Number	Industry	Company Name	Product	Model	Area
1	Research and teaching	GuangXi University	Motorized ultrasonic hardness tester	SU-300M	Guangxi
2		Shenyang University of Technology	Manual ultrasonic hardness tester	SU-300M	Shenyang
3		ZHEJIANG UNIVERSITY	Manual ultrasonic hardness tester	SU-300H	Zhejiang
4	Aerospace	Commercial Aircraft Corporation of China, Ltd.	Manual ultrasonic hardness tester	SU-100H	Shanghai
5		Shenzhou Alloy Wear-resistant Material Factory	Manual ultrasonic hardness tester	SU-300H	Zhejiang
6		Shaanxi Aerospace Pump & Valve Technology Group Co., Ltd.	Manual ultrasonic hardness tester	SU-300H	Shaanxi
7	Home appliances	GREE ELECTRIC APPLIANCES, INC. OF ZHUHAI	Motorized ultrasonic hardness tester	SU-300M	Zhuhai
8	Petrochemical	PAN STONE HYDRAULIC INDUSTRIES CO.	Motorized ultrasonic hardness tester	SU-300M	Anhui
9		Tianjin Dagang Oilfield Wanda Petroleum Machinery Co., Ltd.	Motorized ultrasonic hardness tester	SU-300M	Tianjin
10	Special inspection industry	SICHUAN ASSOCIATION OF SPECIAL EQUIPMENT INSPECTION	Universal Dynasonic hardness tester	SU-400M	Sichuan
11	Ship military	Chian Association of the National Shipbuiding Industry	Motorized ultrasonic hardness tester	SU-300M	Shaanxi
12		Ponglai Jutal Offshore Englneerlng Heavy Industries Co.,Ltd	Motorized ultrasonic hardness tester	SU-300M	Shandong
13		JINXI INDUSTRIES GROUP CO., LTD	Manual ultrasonic hardness tester	SU-100H	Shanxi
14	Steel Group	Roll socially respected company	Universal Dynasonic hardness tester	SU-400H	Jiangsu
15		Changzhou BaoLing Heavy & Industrial	Motorized ultrasonic hardness tester	SU-300M	Jiangsu
16	inspection and detection	Tianjin chengxinda Metal Detection Technology	Universal Dynasonic hardness tester	SU-400H	Tianjin
17		Zhejiang Nondestructive Testing Engineering Technology Co., Ltd.	Manual ultrasonic hardness tester	SU-300H	Zhejiang
18	Heavy equipment	Zhejiang Nondestructive Testing Engineering Technology Company	Manual ultrasonic hardness tester	SU-300H	Zhejiang
19		Sany Automobile Hoisting Machinery Co., Ltd.	Motorized ultrasonic hardness tester	SU-300M	Hunan
21		China Railway Wuxin Heavy Industry Co., Ltd.	Universal Dynasonic hardness tester	SU-400M	Hunan
22		DALIAN HUARUI HEAVY INDUSTRY GROUP CO.,LTD.	Manual ultrasonic hardness tester	SU-300H	Liaoning
23		Nanjing Quanxing Tooling Equipment Co., Ltd.	Motorized ultrasonic hardness tester	SU-300M	Jiangsu
24		CHINA YANDA GROUP	Manual ultrasonic hardness tester	SU-100H	Jiangsu
25	Mechanical Parts	HANGZHOU BOILER GROUP	Manual ultrasonic hardness tester	SU-300H	Zhejiang
26		Qingzhen Jiabaorui Machinery Manufacturing Co., Ltd.	Manual ultrasonic hardness tester	SU-300H	Guizhou
28		GLOBAL PMX CO., LTD.	Motorized ultrasonic hardness tester	SU-300M	Zhejiang
30		Xi'an Sunrise Electronics DivisionbaiTechnology Limited Company	Manual ultrasonic hardness tester	SU-300H	Shaanxi
31		Taizhou Juyuan Machinery Manufacturing Co., Ltd.	Motorized ultrasonic hardness tester	SU-300M	Zhejiang
32	Auto parts	Guilin Fuda Co., Ltd.	Manual ultrasonic hardness tester	SU-300H	Guangxi
33		Jiangsu Tiemao Glass Co., Ltd.	Motorized ultrasonic hardness tester	SU-300M	Jiangsu
34	Heat treatment	TAIZHOU CITY DAXIN HEAT TREAMMENT INSTITUTE	Motorized ultrasonic hardness tester	SU-300M	Zhejiang
35		Longzhong Holding Group Co.,Ltd.	Motorized ultrasonic hardness tester	SU-300M	Zhejiang
36		Guangdong Litaifeng Technology Co., Ltd.	Motorized ultrasonic hardness tester	SU-300M	Guangdong
37	Aluminum profile	Liaoning Zhongwang Group Co., Ltd.	Motorized ultrasonic hardness tester	SU-300M	Liaoning
38		Nanshan Aluminium	Motorized ultrasonic hardness tester	SU-300M	Shandong
39	Fastener	Zhoushan Zhengyuan Fastener Co., Ltd.	Manual ultrasonic hardness tester	SU-300H	Zhejiang
40		Shaoxing Sunny High Strength Fasteners Co., LTD.	Manual ultrasonic hardness tester	SU-300H	Zhejiang
41	Printing plate	Shenzhen Yuncheng Plate Making	Motorized ultrasonic hardness tester	SU-300M	Guangdong
42	Injection molding machine	CHEN HSONG	Motorized ultrasonic hardness tester	SU-300M	Guangdong
43	Bearing	SHENYANG NSK CO.,LTD.	Manual ultrasonic hardness tester	SU-300H	Liaoning
44	Gear drive	Nanjing Huashi Gear Transmission Equipment Co., Ltd.	Manual ultrasonic hardness tester	SU-300H	Jiangsu
45		Tongnuohua Industrial Control Transmission Co., Ltd.	Manual ultrasonic hardness tester	SU-300H	Liaoning
46	Hydraulic equipment	Ningbo Kema (China) Hydraulic Equipment Co., Ltd.	Motorized ultrasonic hardness tester	SU-300M	Zhejiang
47	Power distribution industry	XIAN XD HIGH VOLTAGE APPARATUS CO.,LTD	Manual ultrasonic hardness tester	SU-30H	Shaanxi
48		Zhuzhou Hongda Power Supply Co., Ltd.	Motorized ultrasonic hardness tester	SU-300M	Hunan
49	Wear-resistant material	Shenzhou Alloy Wear-resistant Material Factory	Motorized ultrasonic hardness tester	SU-300M	Jiangsu
50	Fire equipment	ZHEJIANG JINDUN FIRE FIGHTING EQUIPMENT CO., LTD.	Manual ultrasonic hardness tester	SU-300H	Zhejiang
51	Mold industry	Zhejiang Jingcheng Mould Machinery Co., Ltd.	Motorized ultrasonic hardness tester	SU-300M	Zhejiang
52		SINO MOULD COMPONENT(DONG GUAN)CO.,LTD	Motorized ultrasonic hardness tester	SU-300M	Guangdong
53	Cutting Tool	Sentai Inge (Chengdu) CNC Tool Co., Ltd.	Manual ultrasonic hardness tester	SU-100H	Sichuan
54	Printing plate	Roto cylinder	Roller Ultrasonic Hardness Tester	SU-320R	Pakistan
55		Shahld	Roller Ultrasonic Hardness Tester	SU-320R	India
56		Uflex	Roller Ultrasonic Hardness Tester	SU-320R	Italy
57		Repro	Roller Ultrasonic Hardness Tester	SU-320R	Indonesia
58		PT Unipal	Roller Ultrasonic Hardness Tester	SU-320R	Spain
Thank the above users for choosing the ultrasonic hardness tester produced by Sinowon. (The names are arranged in no particular order)					

UCI applied in heat treatment industry

UCI applied in mold industry

SU-340T test the chrome coating hardness inside the pipe

UCI test hardness of Bearing / HAZ weld zone

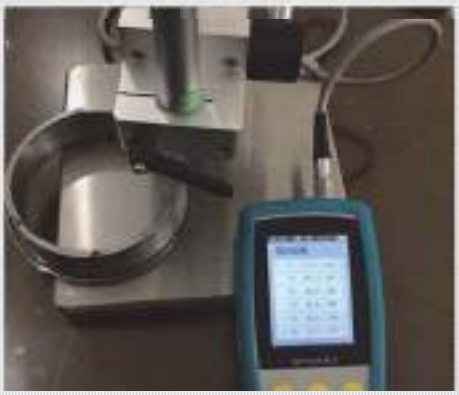

UCI test the hardness of gear

UCI applied in the printing industry

UCT test the hardness of automobile crankshaft /card mold

UCI test the round workpiece with test stand

L P1-14

Portable
Leeb Hardness Tester / P 02-04

Digital Portable
Leeb Hardness Tester / P 05-06

Digital Portable
Leeb Hardness Tester / P 07-08

Pen Type
Leeb Hardness Tester / P 09-11

Portable
Leeb Hardness Tester / P 12

Accessories / P 13-15

➢ **Leeb Hardness Tester**

P 16

Data Statistics Software

Application

- Die cavity of molds
- Bearings and other parts
- Failure analysis of pressure vessel, steam generator and other equipment
- Heavy work piece
- The installed machinery and permanently assembled parts
- Testing surface of a small hollow space
- Material identification in the warehouse of metallic materials
- Rapid testing in large range and multi-measuring areas for large-scale work piece

Measuring Range / Materials

Material	HLD	HRB	HRC	HB	HV	HSD
Steel and cast steel	300-900	38-100	20-68	81-654	81-955	32-100
Cold work tool steel	300-840	--	20-67	--	80-898	--
Stainless steel	300-800	46-101	--	85-655	85-802	--
Grey cast iron	360-650	--	--	93-334	--	--
Nodular cast iron	400-660	--	--	131-387	--	--
Cast aluminum alloys	170-570	23-84	--	19-164	--	--
Brass	200-550	13-95	--	40-173	--	--
Bronze	300-700	--	--	60-29	--	--
Copper	200-690	--	--	45-315	--	--

Measuring Range / Impact Devices

Materials	Scale	Impact Devices					
		D/DC	D+15	C	G	E	DL
Steel andcast steel	HRC	17.9～68.5	19.3～67.9	20.0～69.5		22.4～70.7	20.6～68.2
	HRB	59.6～99.6			47.7～99.9		37.0～99.9
	HRA	59.1～85.8				61.7～88.0	
	HB	127～651	80～638	80～683	90～646	83～663	81～646
	HV	83～976	80～937	80～996		84～1042	80～950
	HS	32.2～99.5	33.3～99.3	31.8～102.1		35.8～102.6	30.6～96.8
Steel	HB	143～650					
CWT、ST	HRC	20.4～67.1	19.8～68.2	20.7～68.2		22.6～70.2	
	HV	80～898	80～935	100～941		82～1009	
Stainless steel	HRB	46.5～101.7					
	HB	85～655					
	HV	85～802					
GC.IRON	HRC						
	HB	93～334			92～326		
	HV						
BRONZE	HB	60～290					
NC、IEON	HRC						
	HB	131～387			127～364		
	HV						
C.ALUM	HB	19～164		23～210	32～168		
	HRB	23.8～84.6		22.7～85.0	23.8～85.5		
BRASS	HB	40～173					
	HRB	13.5～95.3					
COPPER	HB	45～315					

SH-200

Product Features

- Large memory for 500 groups test results.
- Auto-recognition of connected Impact Device.
- Statistical data and upper-lower limit setting.
- RS-232 interface (to hyperterminal or dataview software).
- Time and date settings; auto-clock.
- Back-light LCD.
- Direct display of hardness scales HRB, HRC, HV, HB, HS, HL.
- Conversion to tensile strength σb (U.T.S.).
- For all metallic materials.
- Impact device provides testing at any angle, even upside down.
- High accuracy ±6HLD and conforms to ASTM A 956.
- Six impact devices are available for special applications.

Specifications

Commodity	Portable Leeb Hardness Tester
Model	SH-200
Code#	852-120
Measuring Range	(170～960)HLD, (17-68.5)HRC, (19-651)HB, (80-976) HV, (30-100)HS, (59-85)HRA, (13-100)HRB
Measuring Direction	0~360°
Data Storage	500 Groups test maximum
Printer	Optional Printer
Hardness Scale	HL, HBW, HRB, HRC, HRA, HV, HS, etc
Shell Material	Plastic
Indicating Error	HLD: ±6, HRC: ±1, HB: ±4
Language	Option Chinese, English, German, Portuguese, Turkish
Statistics	Average value, min-max, upper-lower limits
Impact Device	D (standard)
Optional Impact Devices	DC/D+15/DL/G/C/E
Work piece radius(convex/concave)	Rmin=50mm(with support ring Rmin=10mm)
Min. Workpiece Weight	2~5kg on stable support 0.05~2kg with compact coupling except C and G impact device
Workpiece min.thickness couple	5mm, G:10mm, C:1mm
Workpiece min.case hardened depth	0.08mm C: 0.2mm G: 1.2mm
Power Supply	AA/3V
Dimension	(148*72*30)mm
Weight	220g (Excluding impact device and printer)

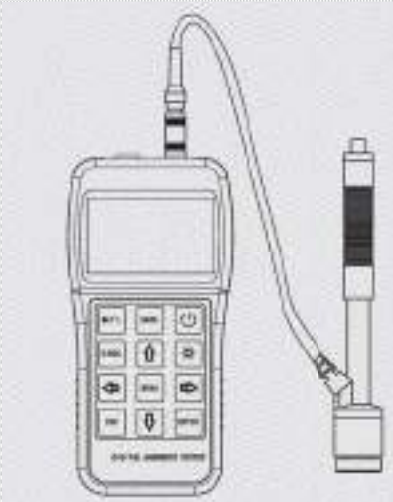

Big Storage	Data Output	Large Screen	Small Errors
500group test data	RS232 port/Printer	128×64 screen	±5 HLD

Product Features

- Large memory for 100 groups test results.
- Statistical data and upper-lower limit setting.
- Prints all test results and histogram.
- RS-232 interface (to hyperterminal or data view software).
- Time and date setting; auto-clock.
- Back-light LCD.
- Direct display of hardness scales HRB, HRC, HV, HB, HS, HL.
- Conversion to tensile strength σb (U.T.S.).
- For all metallic materials.
- Impact device provides testing at any angle, even upside down Integral thermal printer.
- High accuracy ±6HLD and conforms to ASTM A 956.
- Six impact devices are available for special applications.

Specifications

Commodity	Portable Leeb Hardness Tester
Model	SH-300
Code#	852-130
Hardness Scale	HL, HRC, HRB, HRA, HV, HB, HS
Measuring Range	(170-960)HLD, (17-68.5)HRC, (19-651)HB, (80-976)HV, (30-100)HS, (59-85)HRA, (13 -100)HRB
Measuring Direction	0~360°
Indicating Error	HLD: ±5; HRC: ±1; HB: ±4
Memory	500 Groups test maximum
Printer	Built-in Printer
Shell Material	Plastic
Statistics	Average value, min-max, upper-lower limits
Data-Output	RS-232
Impact Device	D (standard)
Optional impact Devices	DC/D+15/DL/G/C/E
Work piece radius (convex/concave)	Rmin=50mm(with support ring Rmin=10mm)
Min. Workpiece weight	2~5kg on stable support 0.05~2kg with compact coupling except C and G impact device
Workpiece min. thickness couple	5mm, expect with impact device G: 10mm, C:1mm
Workpiece min. case hardened depth	0.08mm except C impact device 0.2mm and impact device 1.2mm
Measuring Direction	0~360°
Dimension	(212*72*30)mm
Weight	280g (Excluding impact device and printer)

SH-400

Product Features

- 128*64 dot matrix high contras LCD for optimum viewing in all conditions.
- Full USB communication with PC, software included free of charge.
- Highly accurate (± 4HL) in any impact direction (360°) - automatically.
- Internal storage of data with day and time capacity: 600 reading.
- Available to preset limitation with alarm in case exceeded the ranges.
- Real time shows battery information, auto power off in low battery situation.
- With software calibration function.
- Large capacity lithium battery.

USB Interface

Bluetooth Printing

Specifications

Commodity	Digital Portable Hardness Tester
Model	SH-400
Code#	852-140
Measuring Range	(170-960) HLD, (20-68) HRC, (19-651) HB, (80-967) HV, (30-100) HS, (59-85) HRA, (13-100) HRB
Measuring Direction	In any impact direction (360°)
Hardness Scale	HL, HB, HRC, HRA, HRB, HV, HS
Applicable Materials	Steel and Cast Steel, Metallurgical Steel, Forging Steel, Gray Cast Iron, Nodular Cast Iron, Cast Aluminum Alloy, Pure Copper, Copper Zinc Alloy (Brass), Copper Tin Alloy (Bronze)
Support Impact Device	D / DC / D+15 / G / C / DL
Work piece radius (convex/concave)	Rmin=50mm (with support ring Rmin=10mm)
Min. Workpiece weight	2~5kg on stable support 0.05~2kg with compact coupling except C and G impact device
Workpiece min. thickness couple	3mm
Workpiece min. case hardened depth	0.8mm
Operating Temperature	0～40℃
Battery Life	Continuously work 40hours
Dimensions	(155*55*25) mm
Weight	180 g

Big Storage	Data Output	Large Screen	Small Errors
500group test data	Blue tooth printer	3.2" LCD	±5 HLD

Product Features

- Metal shell, nice appearance design.
- Available to save 500 groups test results.
- Support hardness conversion among HRC, HRA, HRB, HV, HB, etc, can convert 2 different scales simultaneously.
- 3.2" LCD to display hardness result, conversion results, Max, Min,Mean value.
- Support blue tooth printer, with RS232 to connect computer for software running.
- Can test all kinds of metal which more than 5kg.
- Indicating error ±5HLD, conform standard ASTM A956.
- Support 7 types of impact devices.

Product Size

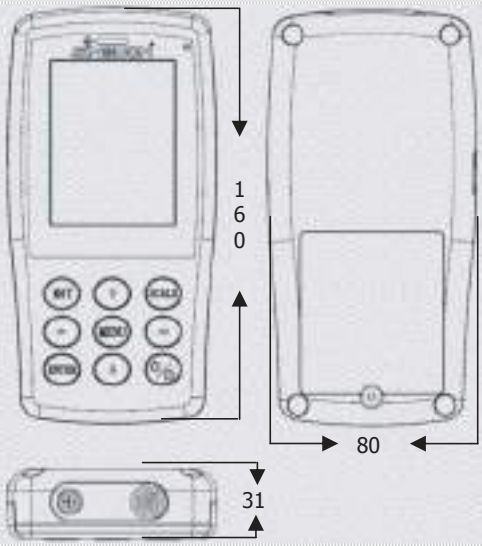

Specifications

Commodity	Portable Leeb Hardness Tester
Model	SH-500
Code#	852-150
Measuring Range	(170-960) HLD, (17-68.5) HRC, (19-651) HB, (80-976) HV, (30-100) HS, (59-85) HRA, (13 -100) HRB
Measuring Direction	0~360°
Data Storage	Maximum 2000 Groups test Results
Data-Output	RS232/Printer
Hardness Indication	240x160 graphic dot color LCD display
Hardness Scale	HL, HBW, HRB, HRC, HRA, HV, HS
Shell Material	Metal
Indicating Error	HLD: ±6, HRC: ±1, HB: ±4
Language Option	Chinese, English, German, Portuguese, Turkish
Statistics	Average value, min-max ,upper-lower limits
Impact Device	D (standard)
Optional impact Devices	DC/D+15/DL/G/C/E
Work piece radius(convex/concave)	Rmin=50mm(with support ring Rmin=10mm)
Min. Workpiece weight	2~5kg on stable support 0.05~2kg with compact coupling except C and G impact device
Workpiece min. thickness couple	D: 5mm, G: 10mm, C: 1mm
Workpiece min. case hardened depth	D: 0.08mm, C: 0.2mm, G: 1.2mm
Power Supply	4.2V
Operating Temperature	0 ℃-40 ℃
Dimension	(160*80*31)mm
Weight	500g(Excluding impact device and printer)

Structure of impact D

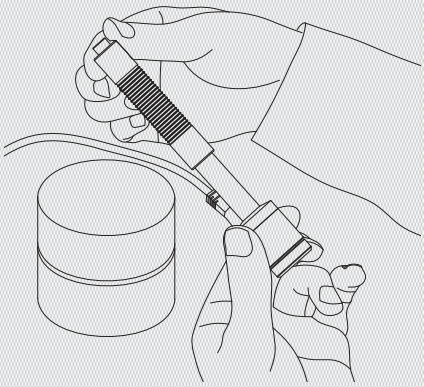

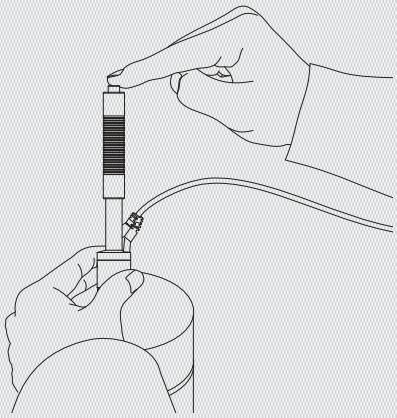

Partial Display

Product Introduction

SH-660 is an innovation of Leeb hardness tester, which based on the new technology dual-coil sensor inside probe. All probes worked with SH-660 are modularized digital probe, which gives more accurate hardness value. Besides, SH-660 can also work with our wireless probe and new RP reading probe as optional.

RD Digital Probe

RF Wireless Probe

Product Features

- Patent dual- coil technology.
- All probe used with SH-660 are digital type.
- Cost- effective with reading probe (optional).
- High repeatability accuracy: +/-4 HL (or 0.3% @HI800).
- High linear accuracy for any angles.
- TFT color display.
- Auto compensate error for different impact direction.
- Powered by AA battery or USB power supply.
- The tester can be attrac ted to the work piece with magnetic base (optional).
- Statistics value can be calculated automatically.
- Up to 10 kinds of menu language.
- Data managing software on PC.
- Power on/off automatically or manually.

Specifications

Commodity	Portable Leeb Hardness Tester
Model	SH-660
Code#	852-166
Measuring Method	Leeb hardness measurement
Accuracy / Repeatability	±4HL/HRC0.2 (0.3% @ HL=800)
Display	High contrast color TFT 240 x 320
Hardness scale	HL, HRC, HRB, HB, HV, HS, HRA, σb
Measuring range	HL170~960, HRC1.3~74.7, HRB1.2~139.7, HB28~1027, HV45~1221, HS4.0~112.1, HRA1.3~88.5, MPa118~3315N/mm²
Probe	Digital probe D/C/DC/D+15/DL/E, Wireless probe D/C/DC/D+15/DL/E (optional), Reading probe D (optional)
Materials and conversioncurves	11 common metal materials, 106 curves
Memory	999 data
Interface	USB / Bluetooth (optional)
Statistics function	Average / Max. / Min. / S. value
Indicator	Low battery
Language	English, Chinese, Russian, Korean, French, Italian, German, Turkish, Spanish
Power on/off	Auto / Manual
Power supply	AA alkaline battery / USB power supply
Working environment	-10~+45°C
Dimension (mm)	(145*68*28)mm
Net weight (g)	158g

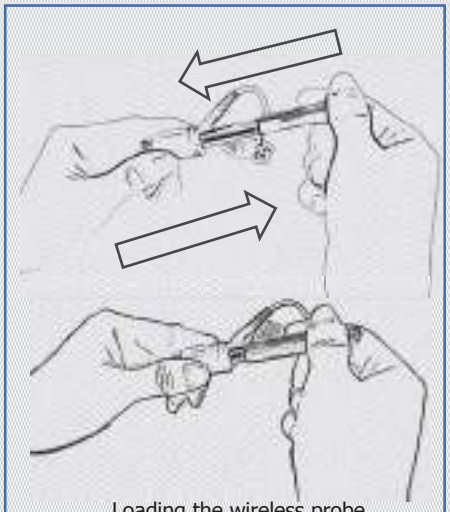

Loading the wireless probe

Release

Impact Device

Impact Device	Digital Probe						Wireless Probe		
	D	C	D+15	E	G	DL	D	DL	G
Code#	852-416	852-446	852-456	852-466	852-476	852-436	852-416W	852-436W	852-476W
Product Picture									

Product Introduction

- New Leeb hardness tester MH-500DL with durable metal housing.
- It still used the patent dual-coil technology which makes it to have extraordinary accuracy with high contrast color TFT display and durable metal housing.
- It has a moving bar-graph display which can evaluate the workpiece upon deviation value by different color for easy visual distinguish.
- It can download measuring data to PC and printout to micro-printer by USB port and wirelessly with internal wireless module.
- The battery can be charged simply from USB port, also it has a customer re-calibration and statistics function.

Product Features

- With strength conversion value
- Moving bar-graph display
- Integrated design , easy operation
- USB and Bluetooth inter face, it can connect micro-printer wirelessly
- Auto compensate error for different impact direction
- 3.7 V Li-ion rechargeable battery
- Four display styles
- Statistics value can be calculated automatically
- Two evaluation modes: By Limit / Deviation
- High accuracy: +/-4 HL
- TFT320X320 colour display

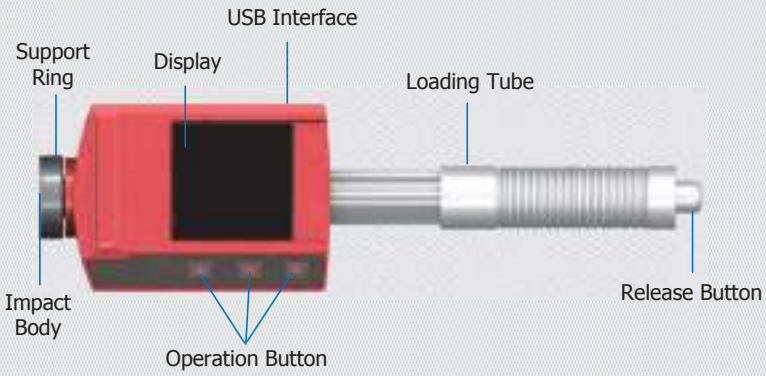

Specifications

Commodity	Portable Leeb Hardness Tester			
Model	MH-500D	MH-500DL	MH-500E	MH-500G
Code#	852-156D	852-156DL	852-156E	852-156G
Impact Devices	D	DL	E	G
Accuracy	±4HL / HRC 0.2 (0.5% @ HL=800)	±4HL / HRC 0.2 (0.5% @ HL=800)	±4HL / HRC 0.2 (0.3% @ HL=800)	±4HL / HRC 0.2 (0.3% @ HL=800)
Dimension	(148*44*22)mm	(205*44*22)mm	(156*44*22)mm)	(253*47*34)mm
Weight	115g	120g	115g	275g
Measuring Range	HL170~960, HRC1.3~74.7, HRB1.2~139.7, HB28~1027, HV45~1221, HS4.0~112.1, HRA1.3~88.5, MPa118~3315N/mm²			
Display	High contrast color TFT 320*320			
Memory	30/60 files on request, 100 data for each file, can be saved and re-readable			
Hardness Scale	HL, HRC, HRB, HB, HV, HS, HRA /σb			
Statistics function	Average, Max., Min., Single Value			
Interface	USB/Bluetooth to PC for transferring data, wireless printing, USB for charging			
Re-calibration	Coincident , Independent			
Working Environment	-20~+70ºC			
Power Supply	3.7V Li-ion rechargeable battery			
Power on/off	Auto/Manual			

Measurement Screen

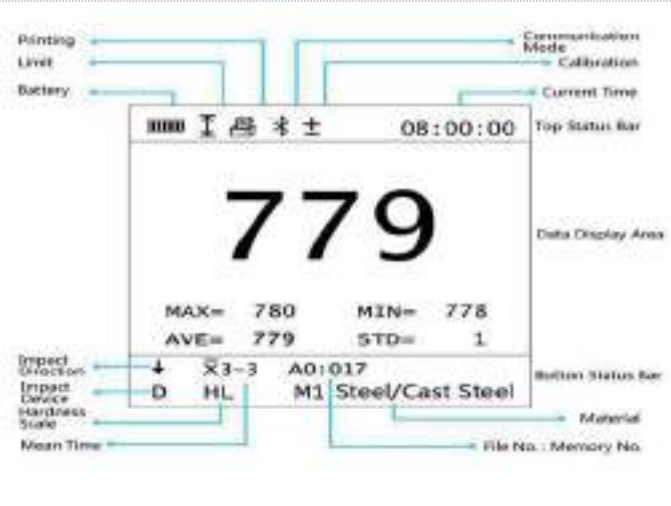

Measurement Screen-Status Bar

M Dynamic Ring Display

Product Introduction

MH-600 is a pen type hardness tester with integrated impact device and processor in one. The patented technology of double coil makes the measurement accuracy of the instrument significantly improved. Full-angle digital probe, test in any direction, no need to test the direction manually. The instrument is equipped with a USB interface for data output. The instrument has an easy-to-use menu design, friendly for usage.

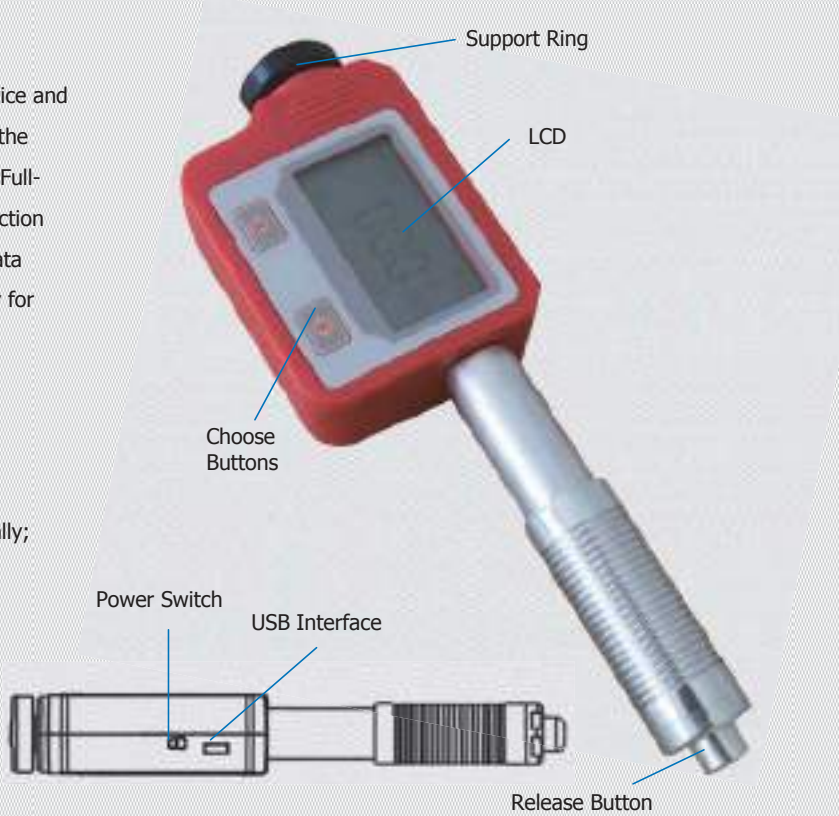

Product Features

- Dual coil wireless digital probe with repeatability up to ±2;
- Full angle measurement, no need to test the direction manually;
- High contrast digital LCD;
- 999 sets of test data can be stored and read out;
- User-calibratable;
- Statistical data can be calculated automatically;
- With intensity conversion function;
- USB interface data transfer.

Specifications

Commodity	Portable Leeb Hardness Tester
Model	MH-600
Code#	852-161
Measuring Method	Leeb hardness measurement method
Accuracy /Repeatability	±HL2, ±HRC0.2, ±HB2, ±HV2
Display	Digital LCD with backlight
Hardness scale	HL, HRC, HRB, HB, HV, HS, HRA, σb
Measurement Range	HL100-960, HRC1-74.7, HRB1.2-140, HB28-1027, HV45-1230, HS4.0-112, HRA7-88.5, σb (rm) 118-3315N/mm²
Impact device	Type D (built-in)
Impact direction	360 degree fully automatic
Applicable materials	10 common metal materials
Storage Capacity	999 sets of data, storable and re-readable
Statistics	Automatic calculation of maximum, minimum and average values
Calibration	User-calibrated
Tips	Low Power Alert
Power	One section of No. 7 battery
Operating temperature	-20~+45℃
Dimension	(148*45*21)mm
Net weight	105g

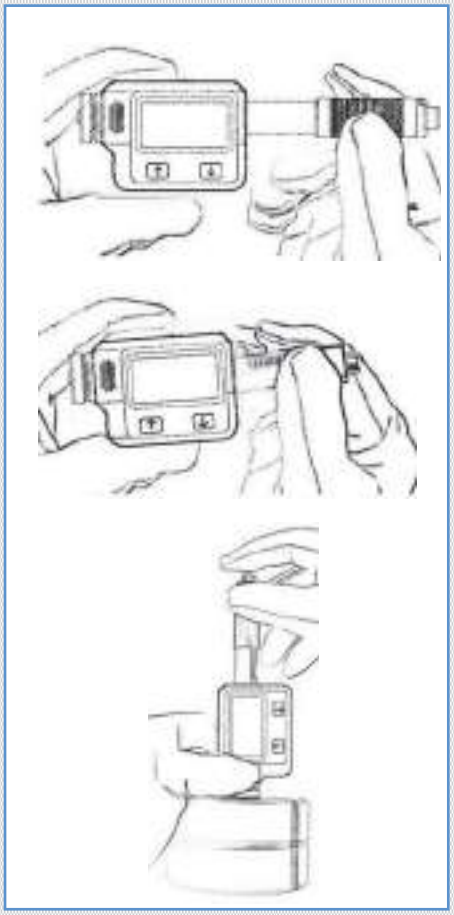

SH-810

Product Features

- 7-inch color touch LCD screen, clear display and convenient operation;
- Two channels of serial communication can be selected, and the measured value, converted value and overrun information can be output;
- USB interface, which can be connected to the computer to upload data;
- Aluminum alloy shell, beautiful and durable;
- Tolerance alarm setting, over limit buzzer alarm prompt;
- 999 data storage records, automatically saved after measurement.

Specifications

Commodity	Portable Leeb Hardness Tester
Model	SH-810
Code#	852-182
Accuracy	± 4 HLD
Hardness Scale	HRC, HRB, HB, HV, HSD, MPA
Display	7″ color touchscreen
Measurement direction	0~360°
Data storage	999 group
Data-Output	RS232; USB
Use environment	-10~40°C, 20~80%RH
Dimension	(200*124*33)mm
Weight	925g (Main unit)

Product Application

- Die cavity of molds;
- Bearings and other parts;
- Failure analysis of pressure vessel, steam generator and other equipment;
- Heavy work piece;
- The installed machinery and permanently assembled parts;
- Testing surface of a small hollow space;
- Material identification in the warehouse of metallic materials;
- Rapid testing in large range and multi-measuring areas for large-scale work piece.

Optional Impact Devices

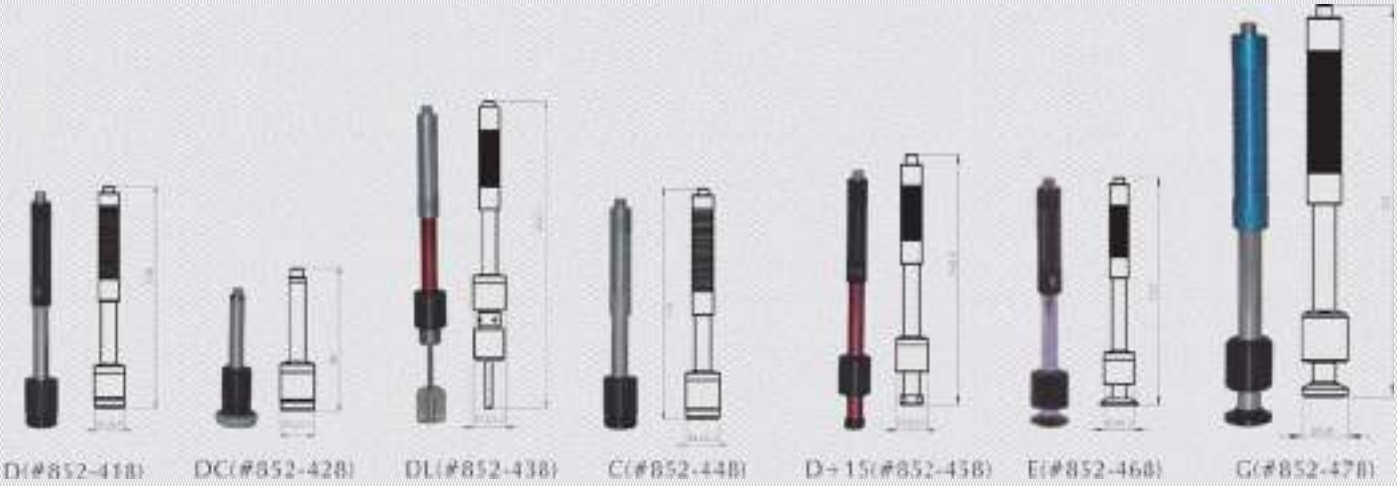

Specifications

Impact Device		D	DC	DL	C	D+15	E	G
Code#		852-410	852-420	852-430	852-440	852-450	852-460	852-470
Impacting Energy		11mJ	11mJ	11mJ	2.7mJ	11mJ	11mJ	90mJ
Weight of Impact Body		5.5g	5.5g	7.2g	7.8g	3.0g	5.5g	20g
Test tip Hardness		1600HV	1600HV	1600HV	1600HV	1600HV	1600HV	1600HV
Dia. Test tip		3mm	3mm	3mm	3mm	3mm	3mm	3mm
Material of Test Tip		Tungsten Carbide					Polycrystalline Diamond	Tungsten Carbide
Impact Body								
Diameter		20mm	20mm	20mm	20mm	20mm	20mm	30mm
Length		148mm	86mm	202.5mm	139mm	162.8mm	155mm	252mm
Weight		50g	50g	50g	75g	80g	80g	250g
Max. hardness of Sample		940HV	940HV	940HV	1000HV	940HV	1200HV	650HB
Average Roughness Ra		1.6μm	1.6μm	1.6μm	0.4μm	1.6μm	1.6μm	6.3μm
Min. weight of Sample								
Measurement Directly		>5kg	>5kg	>5kg	>1.5kg	>5kg	>5kg	>15kg
Need Support Firmly		2 ~ 5kg	2 ~ 5kg	0.5 ~ 1.5kg	2 ~ 5kg	2 ~ 5kg	2 ~ 5kg	5 ~ 15kg
Need Coupling Tightly		0.05 ~ 2kg	0.05 ~ 2kg	0.02 ~ 0.5kg	0.05 ~ 2kg	0.05 ~ 2kg	0.05 ~ 2kg	0.5 ~ 5kg
Min. thickness of Sample								
Coupling Tightly		5mm	5mm	5mm	1mm	5mm	5mm	10mm
Hardening Layers		≥0.8mm	≥0.8mm	≥0.8mm	≥0.2mm	≥0.8mm	≥0.8mm	≥1.2mm
Indentation of Test tip								
Hardness 300HV	Diameter	0.54mm	0.54mm	0.54mm	0.38mm	0.54mm	0.54mm	1.03mm
	Depth	24μm	24μm	24μm	12μm	24μm	24μm	53μm
Hardness 600HV	Diameter	0.45mm	0.45mm	0.45mm	0.32mm	0.45mm	0.45mm	0.90mm
	Depth	17μm	17μm	17μm	8μm	17μm	17μm	41μm
Hardness 800HV	Diameter	0.35mm	0.35mm	0.35mm	0.30mm	0.35mm	0.35mm	
	Depth	10μm	10μm	10μm	7μm	10μm	10μm	
Error and Repeatability of Displayed Value								
Hardness Value		760±30HLD 530±40HLD	760±30HLDC 530±40HLDC	878±30HLDL 736±40HLDL	822±30HLC 590±40HLC	766±30HLD+15 544±40HLD+15	725±30HLE 508±40HLE	590±40HLG 500±40HLG
Error of Value		±6 /±10 HLD	±6 /±10 HLDC	±12 HLDL	±12HLC	±12 HLD+15	±12HLE	±12 HLG
Repeatability		6 /10 HLD	6 /10 HLDC	12 HLDL	12HLC	12 HLD+15	12HLE	12 HLG

Impact Devices Application

Type	Code#	Application Area	Impact Energy	Indenter
C	852-440	Reduced impact energy. For surface-hardened components, coatings, thin or impact-sensitive parts (small indentation).	3N mm	Tungsten carbide 3mm
D	852-410	Most widely used probe. For the majority of testing applications.	11N mm	Tungsten carbide 3mm
DC	852-420	Short impact device. For applications in restricted spaces, e.g. in bores, cylinders or for measurements in assembled machines.	11N mm	Tungsten carbide 3mm
DL	852-430	Slim measuring nose. For measurement under extreme space limitations or on the floor of grooves.	11N mm	Tungsten carbide 2.8mm
E	852-460	Diamond indenter. For measurements in extreme hardness ranges (above 50 HRC / 650 HV). Tool steels with high carbide content.	11N mm	Polycrystalline diamond 3mm
G	852-470	Increased impact energy. Solid components, e.g. heavy-duty casts and forged parts.	90N mm	Tungsten carbide 5mm

Optional Support Ring

Commodity		Optional Support Ring
Code#		852-518
No.	Model	Remarks
1	K14.5-30	For testing spherical outside surface SR14.5 ~ SR30
2	K10-15	For testing spherical outside surface SR10 ~ SR15
3	HK16.5-30	For testing spherical inside surface SR16.5 ~ SR30
4	HK12.5-17	For testing spherical inside surface SR12.5 ~ SR17
5	HK11-13	For testing spherical inside surface SR11 ~ SR13
6	Z10-15	For testing cylindrical outside surface R10 ~ R15
7	Z14.5-30	For testing cylindrical outside surface R14.5 ~ R30
8	Z25-50	For testing cylindrical outside surface R25 ~ R50
9	HZ16.5-30	For testing cylindrical inside surface R16.5 ~ R30
10	HZ12.5-17	For testing cylindrical inside surface R12.5 ~ R17
11	HZ11-13	For testing cylindrical inside surface R11 ~ R13
12	UN	For testing cylindrical outside surface, radius adjustable R10 ~ ∞

Measuring Range / Materials

Material	HLD	HRB	HRC	HB	HV	HSD
Steel and cast steel	300-900	38-100	20-68	81-654	81-955	32-100
Cold work tool steel	300-840	--	20-67	--	80-898	--
Stainless steel	300-800	46-101	--	85-655	85-802	--
Grey cast iron	360-650	--	--	93-334	--	--
Nodular cast iron	400-660	--	--	131-387	--	--
Cast aluminum alloys	170-570	23-84	--	19-164	--	--
Brass	200-550	13-95	--	40-173	--	--
Bronze	300-700	--	--	60-29	--	--
Copper	200-690	--	--	45-315	--	--

Accessories

Leeb Hardness Block(#852-630)
(Standard Delivery)

Impact Devices
(Optional Accessories)

RS-232 Data Cable (#852-810)
(Optional Accessories)

Rechargeable Batteries(#852-840)
(Standard Delivery)

Support Ring(#852-510)
(Optional Accessories)

Host silicone sleeve(#852-931)
(Optional Accessories)

USB Charger with Cable(#852-851)
(Standard Delivery)

Mini-printer(#852-830)
(Optional Accessories)

SPC Software(#882-381)
(Optional Accessories)

Toolbox(#852-901)
(Standard Delivery)

Digital Probe
(Optional Accessories)

Bluetooth Receiver(#882-710)
(Optional Accessories)

里氏探头线(#852-820)
(Standard Delivery)

Wireless Probe
(Optional Accessories)

Bluetooth Printer (#852-361)
(Optional Accessories)

Data Statistics Software

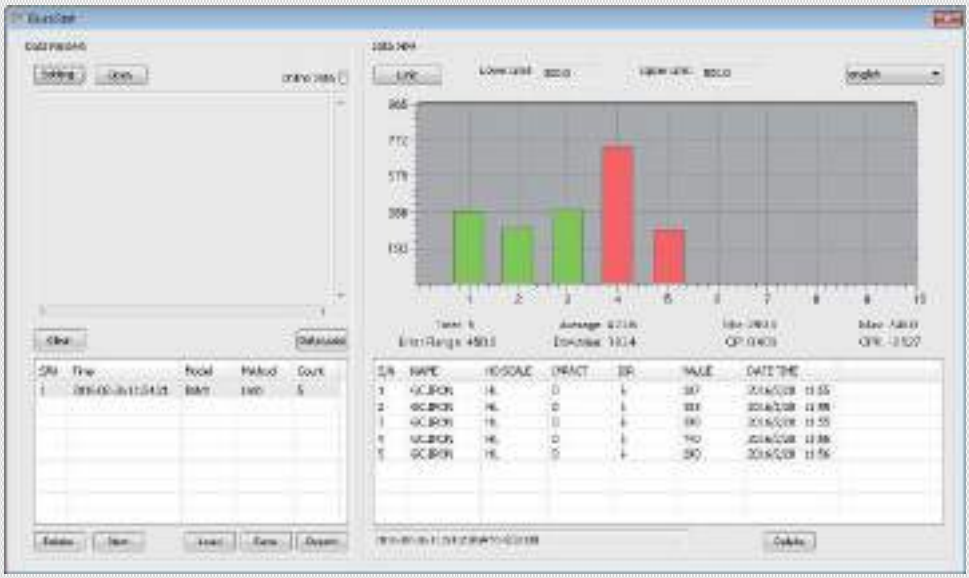

Product Introduction

DuraStat used to work with portable UCI and Leeb hardness testers, and run in Windows OS by Blue Tooth, USB or COM port to connect between hardness tester and computer to read data, then do data process, like display, save, copy or delete, make operation visualization, also can generate report and print.

Product Features

- Support all the hardness testers which manufactured by Sinowon;
- Support statistics of historical data and current data;
- Support import and export of historical data;
- Visual histogram display and statistics;
- Available to set limitation to show abnormal;
- Support Chinese, English and other languages;
- Support user-defined report header;
- Support Excel format report.

Setting

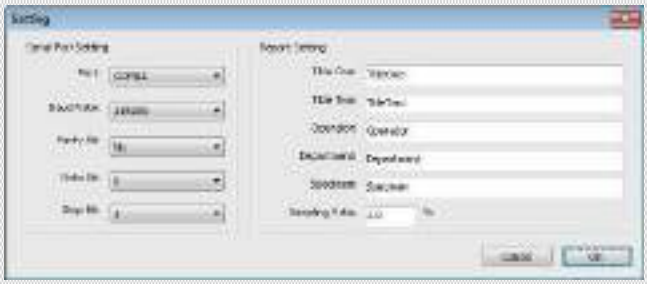

Export

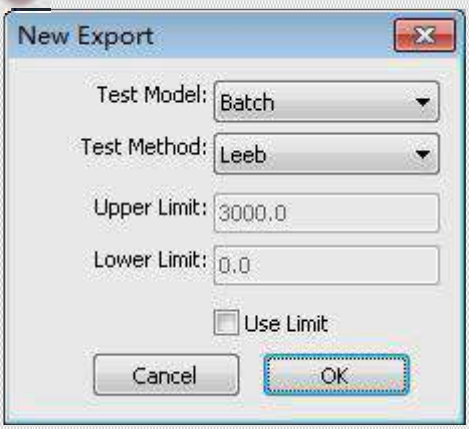

Report

H

P P1-10

Portable
Shore Durometer / P 01-06

Portable
Rockwell Durometer / P 07-09

Portable
Brinell Durometer / P 10-13

Portable
Webster Durometer / P 14

Portable
Barcol Durometer / P 15-16

➢ **Portable Hardness Tester**

P 17-18 / Accessories

Application

- Die cavity of molds
- Bearings and other parts
- Failure analysis of pressure vessel, steam generator and other equipment
- Heavy work piece
- The installed machinery and permanently assembled parts
- Testing surface of a small hollow space
- Material identification in the warehouse of metallic materials
- Rapid testing in large range and multi-measuring areas for large-scale work piece

LX-AT (#842-215) LX-CT (#842-225) LX-DT (#842-235)

Product Introduction

- Shore durometer are designed to determine the indentation hardness of material ranging from cellular products from to rigid plastics.
- LX-AT Shore Durometer, designed for testing the hardness of vulcanized rubber and plastic products, has simple structure, easy operation and reading, facility and high resolution. It complies with the standard of GB/T531-1999 and other relevant standard.
- LX-CT Shore Durometer , designed for testing the hardness of foam, sponge, shoe microporore material, etc. It is in accordance with HG/T2489-93.
- LX-DT Shore Durometer is designed for testing the hardness of hard rubber, resin, glass, printed board, fiber and so on. It is in accordance with GB/ T531-1999.
- The Durometer test stand is R&D for Shore A, C, and D Durometer. The test stand construction includes operating handle, adjusted glass stage, die poise, clip beam of durometer and carrick column. The shore hardness testing will be more accurate with the stand.

Specifications

Commodity	Twin-index Analogue Shore Durometer		
Model	LX-AT	LX-CT	LX-DT
Code#	842-215	842-225	842-235
Measuring Range	0-100 HA	0-100 HW	0-100 HD
Available Measuring Range	10-90 HA	10-90 HW	10-90 HD
Resolution	2.5 mm	2.5 mm	0~2.5 mm
Tip Dimension	0.79mm	SR2.5mm	SR0.1mm
Dimension (LxWxH)	(115*60*25)mm	(115*60*25)mm	(115*60*25)mm
Net Weight	100g	100g	100g
Execution Standard	GB/T 531 , DIN53505 , ASTM D2240 , ISO7619 , JISK7215		

Shore Durometer and Test Stand

Commodity	Testing Stand		
Model	LX-AS	LX-CS	LX-DS
Code#	842-515	842-525	842-535
Dimension	(116*161*340)mm	(116*161*340)mm	(116*161*340)mm
Weight	100g	100g	100g
Weight of Stand	5.5kg	5.5kg	7.0kg

SI-100 Series

Product Introduction

Shore Hardness Tester SI-100 Series include (A, B, C, D, E, O, DO, OO)type, model complete, with different probe size, use for different measured objects and hardness value, to meet different request for kinds of material hardness measurement.Shore hardness tester are widely used in rubber plastic hardness measurement has and the features of simple structure easy to use type of light weight small reading intuitive etc can carry hand held measurement also can device in supporting the production of the constant load shelf fixed load measurement.

Product Features

- Public and imperial units converted, with the average computing power.
- Integrated design, small volume, light weight, simple structure, easy to use, intuitive readings and automatic shutdown function.
- Use USB data output and RS-232 data output with connection PC.
- Brovid"Bluetooth" data output choice.

Specifications

Commodity	Digital Shore Durometer							
Model	SI-100A	SI-100B	SI-100C	SI-100D	SI-100DO	SI-100O	SI-100E	SI-100OO
Code#	842-311	842-321	842-331	842-341	842-351	842-361	842-371	842-381
Display	LCD Display							
Measuring Range	10~90 HA/HD(B/C/E/O/DO/OO)							
Statistics	Average value, min-max							
Resolution	0.1H							
Accuracy	≤1H							
Operating temperature	0~40°C							
Power Supply	2x1.5v AAA (UM-4)battery							
Dimension	(176*63*25)mm							
Weight	310g							

Model Information

Model	Code#	Indenter	Typical Examples Of Materials Tested	Haardness Value
SI-100A	842-311	0.79 Truncated (Frustum) cone	Soft vulcanized rubber, natural rubber natriles, thermoplastic elastomers, flexible polyacrylics and thermosets, wax, felt, and leathers.	20~90A
SI-100B	842-321	R0.1 Cone	Moderately hard rubber, thermoplastic elastomers, paper products, and fibrous materials.	Above 90 A/ Below 20 D
SI-100C	842-331	0.79Truncated (Frustum) cone	Medium-hard rubber, thermoplastic elastomers, medium-hard plastics and thermoplastics.	Above 90 B/Below 20 D
SI-100D	842-341	R0.1 Cone	Medium-hard rubber, thermoplastic elastomers, medium-hard plastics and thermoplastics.	Above 90 A
SI-100DO	842-351	R1.2 Spherical radius	Moderately hard rubber, thermoplastic elastomers, and very dense textile windings.	Above 90 C/Below 20 D
SI-100O	842-361	R1.2 Spherical radius	Soft rubber, thermoplastic elastomers, very soft plastics and thermo plastics, medium-density textile windings.	Above 20 DO
SI-100E	842-371	R2.5 Spherical radius	Hard sponge, EVA	Above 90 DO/Below 20 A
SI-100OO	842-381	R1.2 Spherical radius	Extremely soft rubber, thermoplastic elastomers, sponge, extremely soft plastics and thermoplastics, foams, low-density textile windings	Below 20 O

SI-200A(842-312)

SI-200C(842-332)

SI-200D(842-342)

Product Application

- SHORE A DUROMETER: It is designed for testing the hardness of soft rubber, printer roller and other elastomer material.
- SHORE D DUROMETER: It is designed for testing the hardness of hard rubber, such as thermoplastic plastics, bowling plastic floor and so on.
- SHORE C DUROMETER: It is designed for measuring Foam, Sponge, Shoes with incorporates material. etc.

Specifications

Commodity	Digital Shore Durometer		
Model	SI-200A	SI-200C	SI-200D
Code#	842-312	842-332	842-342
Measuring Range	0-100HA	0-100HC	0-100HD
Available Measuring Range	10-90HA	10-90HC	10-90HD
Resolution	0.1HA	0.1HC	0.1HD
Indenter Shape	Flat cone point(0.79mm)35°Included Angle	2.5mm Spherical	Sharp cone point (SR0.1mm) 30°Included Angle
Power Supply	Runs on by one 1.5V cell battery		

Matters Needing Attention

- Thickness of specimen>6mm, no more than 3 layers; Test area >feet area (diameter 18mm)
- Test 3 times and calculate the average as test result.
- Usually, use A/D. When the hardness of A>90, use D.

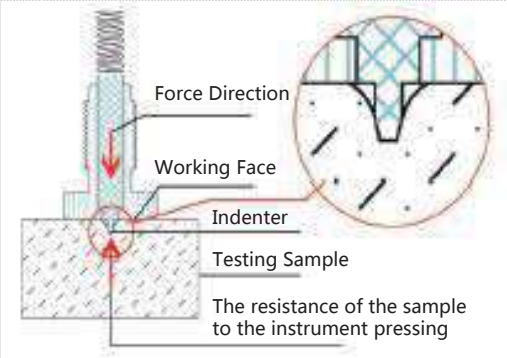

SI-300 Series

Product Introduction

SI-300 series Digital Durometer is Suitable for measuring the hardness of rubber, plastic and other non-metallic materials.

Product Features

- Calibration Certificate Included
- Conforms to ASTM D 2240, GB/T 531.1, ISO7619-1
- A large, easy-to-read LCD display with backlight
- Measurement mode: Averaging mode, Max Mode, Max-Average mode.
- Measurement data can be stored, browsing and batch printing.
- Printing: Wireless mini-printer.
- Upload to PC.

Specifications

Commodity	Digital Shore Durometer
Model	SI-300
Accuracy	≤±1H
Resolution	0.1 H
Memory	500 readings
Power	1.5V*3 (AAA alkaline batteries)
Dimensions	(150*50*29)mm
Weight	170g
Operating Environment	-10 ~ 40°C, 20 ~ 80%RH

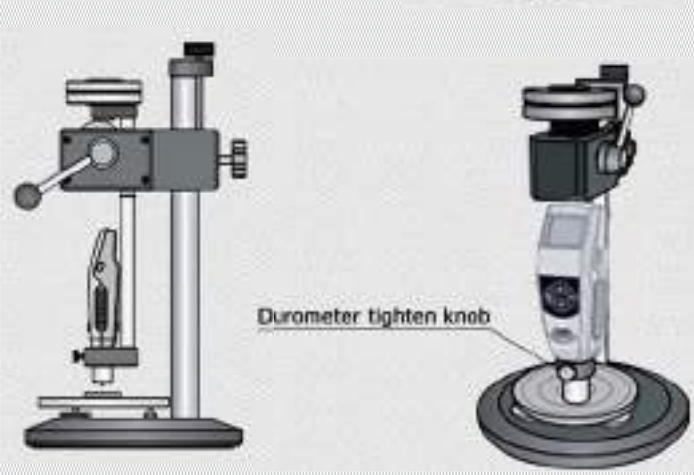

Product Application

Model	Code#	Types	Indenter	Applications
SI-300A	842-611	A		Soft vulcanized rubber, natural rubber, nitriles, thermoplastic elastomers, flexible polyacrylics and thermosets, wax, felt, and leathers.
SI-300C	842-631	C		Medium-hard rubber, thermoplastic elastomers, medium-hard plastics, and thermoplastics.
SI-300D	842-641	D		Hard rubber, thermoplastic elastomers, harder plastics, and rigid thermoplastics.
SI-300B	842-621	B		Moderately hard rubber, thermoplastic elastomers, paper products, and fibrous materials.
SI-300E	842-671	E		Soft rubber, sponges, and foam elastomer material, and film coil and winding (textile yarn spindle).
SI-300OO	842-681	OO		Soft rubber, thermoplastic elastomers, very soft plastics and thermoplastics, medium-densitytextile windings.
SI-300O	842-661	O		Extremely soft rubber, thermoplastic elastomers, sponge, extremely soft plastics and thermoplastics, foams, low-density textile windings, human and animal tissue.
SI-300DO	842-651	DO		Moderately hard rubber, thermoplastic elastomers, and very dense textile windings.

Specifications

Commodity	Manual Durometer Test Stand
Operating Type	Inverter to specimen
Loading Method	Cam loading
Cam loading	18 mm
Specimen Thickness	≤60mm
Throat Depth	65mm
Support Table(dia.)	φ116 mm
Lifting Adjustment	Screw adjustment
Table Adjustment	Three-point leveling
Net Weight	5.6 kg (excluding weight)
Package Weight	7.6 kg (excluding weight)

Optional Accessories

Commodity	Applications
Weight 4500	4500g, for D, C, DO and other types

Technical Drawing

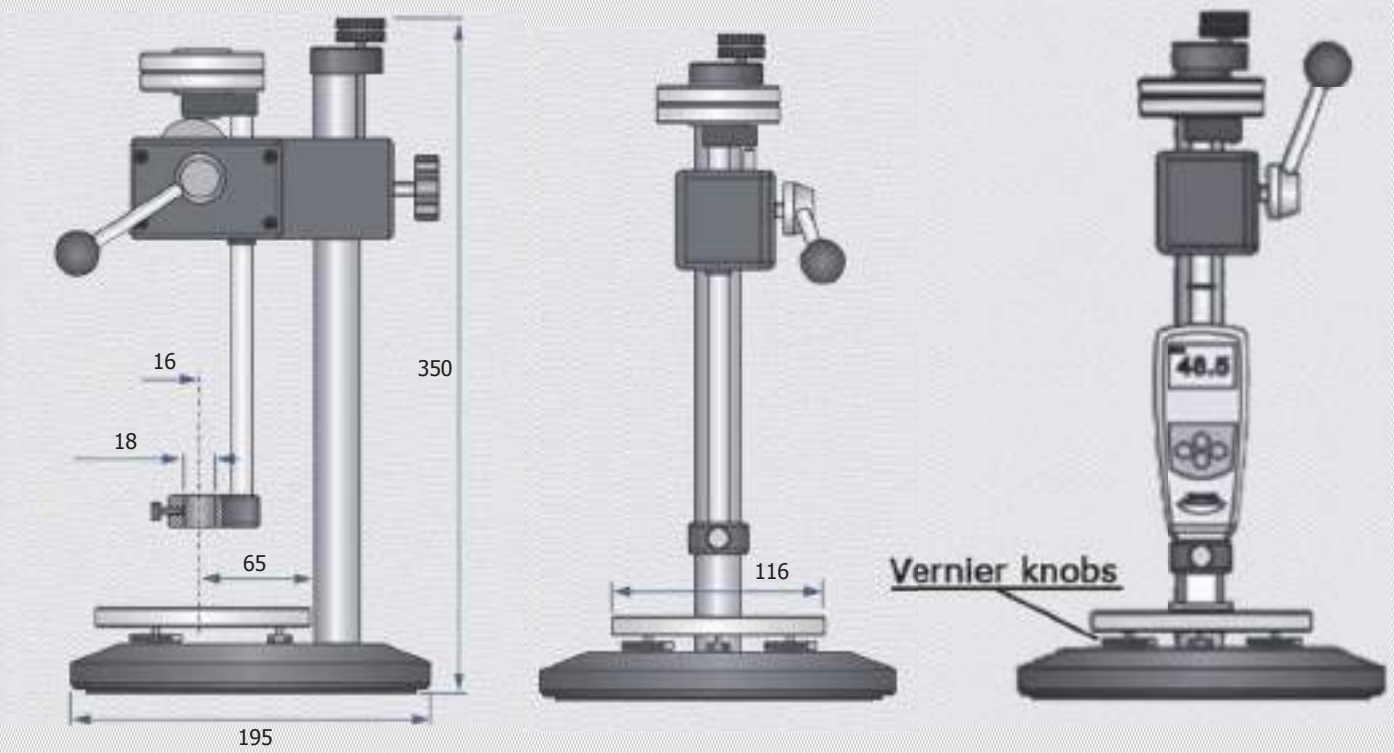

SI-400

Product Introduction

- One-Key Automatic Shore Measurement;
- Accurate testing for Rubber, Sponge, and Plastic hardness;
- A, D, and C probes available. Automatic Probe identification;
- Touch screen, easy operation;
- No worry continuous testing;
- Integrated metal construction ensures the best testing stability.

Specifications

Commodity	Motorized Shore Durometer
Model	SI-400
Code#	842-711
Loading Mode	Stepping motor
Stroke	160mm
Sliding Platform Stroke	80mm
Force Loading Method	Spring Force
Throat Depth	120mm
Probe	HA, HD, HOO
Resolution	0.1H
Reading Accuracy	±1H
Output	Data interface, USB
Display	800*480 serial display
Operating Environment	-10~40℃, 20~80%RH
Power	DC24V5A

Technical Drawing

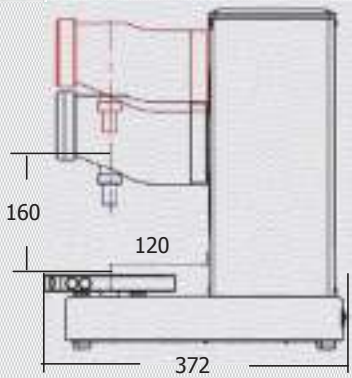

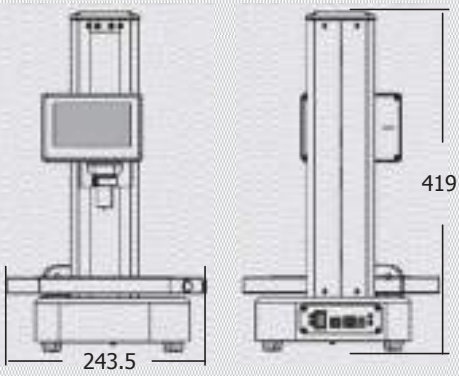

PHR-1(#812-113)
PHR-1S(#812-313)
Opening Size: 25X25mm

PHR-4-4(#812-153)
Opening Size: 100X100mm

PHR-4-2(#812-133)
PHR-4-2S(#812-333)
Opening Size: 100X50mm

PHR-2(#812-123)
PHR-2S(#812-323)
Opening Size: 50X50mm

PHR-8-4(#812-163)
Opening Size: 200X100mm

PHR-4-3(#812-143)
Opening Size: 100X75mm

PHR-20-12(#812-183)
Opening Size: 500X300mm

PHR-8-10(#812-173)
Opening Size: 200X250mm

Specifications

Preliminary Test Force	10Kgf(98.07N)
Test Force	60kgf(558.4N), 100kgf(980.7N), 150kgf(1471.3N)
Indenter	120°Cone Diamond Indenter Φ1.588mm Ball indenter
Indication Error	Meets the requirements of ISO06508
Repeatability Error	Meets the requirements of ISO06508
Resolution	0.5HR
Measuring Range	15 scales, such as HRA, HRB, HRC, and so on.
Application	All common metal,including steel,copper,aluminum,nickel,lead,tin,cemented steel,hard alloy,etc

Φ1.588 Carbide ball indenter

Φ3.175mm Carbide ball indenter

Φ6.35mm Steel ball indenter

Φ12.7mm Steel ball indenter

Diamond Conel indenter

Extensions

Anvil for testing ball

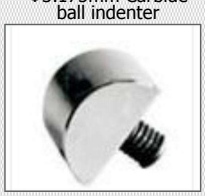

Convex cylindrical anvil

Anvil for testing ball

Flat anvil

Rockwell Test block

Bench stand

Portable Rockwell Durometer

Product Application

PHR series is a precisely portable hardness testing instrument for the measurement of metal and plastic material, it is not only suitable to measure the small parts, but also measure large parts, it not only offset the problem that bench top hardness tester can not move to test the large and fixed parts, but also offset the problem that the rebound hardness tester can not make a accurate testing for small parts.

PHR-100(#812-213)
PHR-100X(#812-223)

Product Features

- This Rockwell hardness tester is small, portable, accurate, light weight only 0.8kg, and can be easily operated like micrometer.
- Our Rockwell portable hardness tester works on practical hardness testing principle, having the same high testing precision as that of a bench type device. It has high testing accuracy complies with the ISO6508 standard, with an error of no more than 1.5HRC, tested by the National Institute of Metrology.
- The Rockwell portable hardness tester can be adopted for testing fine, long, small and irregular parts, instead of the bench hardness tester.
- Comprising the main unit and holder, the hardness tester can either be used on the table or easily carried to workshops.
- It is fast, only 10 seconds to finish a test.
- Rockwell hardness value can be conveniently read out.
- The internal and external surface hardness of steel tubes can be tested by the Rockwell portable hardness tester.
- This testing device suits parts with small bearing surface, in particular.
- It is designed with traceable standard hardness block, and penetrator passing the inspection by standard Rockwell hardness tester.
- The load cell used to calibrate load can be traced to national secondary standard.

PHR-16(#812-413)
PHR-32(#812-423)
PHR-64(#812-433)

Standard Delivery

Commodity	Code #
Instrument Main Body	PHR
120°Cone Diamond Indenter	812-403
Flat-anvil	812-503
V-shape Anvil	812-523
Rockwell Test Blocks	------
Φ1.588mm Ball Indenter	812-463
Accessory Box	812-901
Operation Manual	------

Product Application

- Apply to test too large or heavy iron and steel parts for the desk testers.
- Test the hardness of steel parts, bearings, moulds; large and medium-sized heating parts.
- Test a large batch of parts piece by piece on site.
- Replace inaccurate and unreliable Leeb hardness tester, in a wide range of manufacture industry.

Product Features

- It is fixed onto the surface of a iron and steel part smartly with magnetic chucks. Simply reached one side of the part, the test could be accomplished. Only if the surface is available, a iron and steel part could be tested, no matter what shapes and sizes are.
- It follows the Rockwell Hardness Test Principle, and complies with relevant regulation of ISO6508, and ASTM E18 standards.
- It simplifies the operation steps of Rockwell Hardness Test: directly load total test force; maintain it for a few seconds; release the total test force and then the test is finished. It takes about only 10 seconds for a test, high effective.
- It permits customer to calibrate the tester with a standard block at any time.
- It could be operated under a temperature range of 0℃ to 50℃ either indoor or outdoor.

Specifications

Commodity	Digital Magnetic Rockwell Hardness Tester
Model	PHR-200
Code#	812-233
Initial Test Force	10 kgf
Total Test Force	60 kgf, 100 kgf, 150 kgf
Testing Range	20~88 HRA, 20~100 HRB, and 20~70 HRC
Testing Resolution	0.1 HR
Indication Error	Complying with ISO6508,ASTM E18 standards
Repeatability Error	Complying with ISO6508,ASTM E18 standards
Test Force Error	≤±1%
Operating Temperature	0~50℃
Dimension	580mm×520mm×350mm
Weight	5.3 kg
Test Piece Surface	Flat: Area≥195 mm×60 mm Thickness≥5 mm Cylinder: Diameter≥50 mm Length≥200 mm Thickness≥8 mm

Diamond Indenter | Ball Indenter | Standard Rockwell hardness block

Base Steel | Charger | Battery box

PHB-200

Product Application

- By means of magnetic attraction force, the tester can be mounted on the steel part to be tested. Its Brinell hardness test method and test conditions meet the requirement of standards ASTM E110 and ISO 6506-2.
- Designed for rapid and accurate Brinell hardness test in the field, in combination with the MS-1 Brinell indentation measurement system.
- Suitable for large or heavy steel parts that cannot be tested with bench hardness testers.
- Suitable for steel plates, steel pipes, moulds, dies and other heat treated parts.
- Suitable for testing on welding lines of boilers, pressure vessels and pressure pipes.
- Alternative for Leeb hardness testers with lower accuracy and reliability.secondary standard.

Product Features

- Unique and patented.
- The smallest and the most accurate in-field Brinell hardness tester.
- Easy operation with very high accuracy.
- Only one side of the work piece needs to be reached.
- Force and dwell time display on LED screen.
- Bright and clear view at lighted test point.
- Test blocks available for daily verification.

Specifications

Commodity		Digital Magnetic Brinell Hardness Tester
Model		PHB-200
Code#		832-153
Test Force		187.5 kgf
Test force Tolerance		≤±1%, complying with ISO and ASTM standards
Indenter		2.5 mm carbide ball
Range of testing		100 – 650 HBW
Indication Error		Complying with ISO and ASTM standards
Repeatability		Complying with ISO and ASTM standards
Ambient Temperature		5 – 45℃
Dimensions		245×105×238 mm
Weight		5.1 kg
Test piece dimension	Flat	Area≥195 mm×60mm ;Thickness≥5 mm
	Round	Diameter≥60 mm ; Length≥200 mm; Thickness≥8 mm

Product Application

PHB-1 hammer impact type tester should be compared periodically with a bench Brinell hardness tester or static type tester.

PHB-1(#832-145)

Product Features

- Accurate and consistent test force, controlled by precision shear pin. Works in static type and hammer impact type and follows Brinell hardness test method.
- According to the similarity principle of Brinell hardness test, this tester has 1580kg test force,Φ7.26mm spherical indenter, F/D2=30. The test condition is equivalent to the commonly used 3000kg test force, Φ10mm ball condition.
- High accuracy and repeatability; tested by National Institute of Metrology with tolerance less than ±3%. The accuracy meets the requirements of ISO 6506 and is no lower than that of the bench Brinell hardness tester.
- Easy, quick and simple operation. Static type for testing medium and small size work-pieces; hammer impact type for testing large work-pieces.
- Only one inexpensive shear pin is consumed in each test.
- Good choice to replace Leeb hardness tester and Poldi type hammer impact hardness tester with lower accuracy.

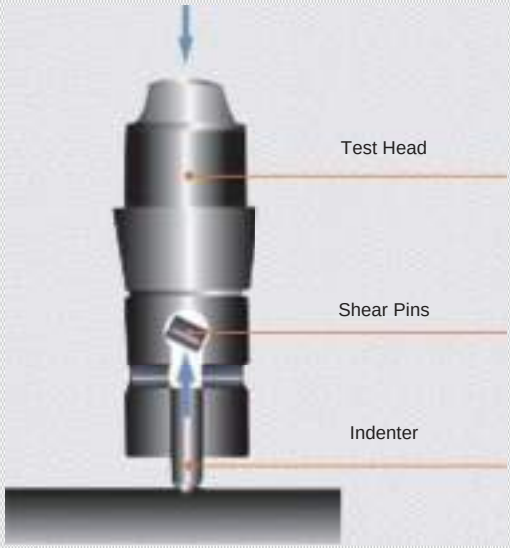

Shear Pins (#832-723) | Test Head (#832-933) | Socket (#832-913)

Specifications

Commodity	Hammer Impact Brinell Durometer
Model	PHB-1
Code#	832-143
Test Force	1580kg
Tolerance of Test Force	< 0.5%
Indenter	Φ7.26mm steel spherical suface indenter, (test range: 100-400HB); Φ4.0mm carbide spherical surface indenter, (test range: 400-650HB)
Measuring Range	100-650HB
Application	Casting, forging and steel raw materials etc
Accuracy	Error of static type: <±3%HB, Error of hammer impact type: <±5%HB
Package Dimensions	(510*375*177)mm
Gross/Net Weight	3.8Kg/0.8kg

Optional Brinell Measurement Software

- Friendly Operation Interface
- Auto Identification Measurement
- High Definition Indentation
- Magnetic Touch
- Auto-save Data and Generate Report
- Powerful Compatibility

PHB-150

Product Application

If the workpiece can be placed into the C clamp ,PHB-150 static type is recommended for a mord accurate test result.

Product Features

- Accurate and consistent test force, controlled by precision shear pin. Works in static type and hammer impact type and follows Brinell hardness test method.
- According to the similarity principle of Brinell hardness test, this tester has 1580kg test force, Φ7.26mm spherical indenter, F/D2=30. The test condition is equivalent to the commonly used 3000kg test force, Φ10mm ball condition.
- High accuracy and repeatability; tested by National Institute of Metrology with tolerance less than ±3%. The accuracy meets the requirements of ISO 6506 and is no lower than that of the bench Brinell hardness tester.
- Easy, quick and simple operation. Static type for testing medium and small size workpieces; hammer impact type for testing large work-pieces.
- Only one inexpensive shear pin is consumed in each test.
- Good choice to replace Leeb hardness tester and Poldi type hammer impact hardness tester with lower accuracy.

PHB-150(#832-123)

Specifications

Commodity	Dual-use Brinell Durometer
Model	PHB-150
Code#	832-123
Test Force	1580kg
Tolerance of Test Force	< 0.5%
Indenter	Φ7.26mm steel spherical suface indenter, (test range: 100-350HB); Φ4.0mm carbide spherical surface indenter, (test range: 350-650HB)
Measuring Range	100-650HB
Application	Casting, forging and steel raw materials etc
Accuracy	Error of static type: <±3%HB, Error of hammer impact type: <±5%HB
Package Dimensions	(705*375*205)mm
Gross/Net Weight	11.6Kg/4.2kg

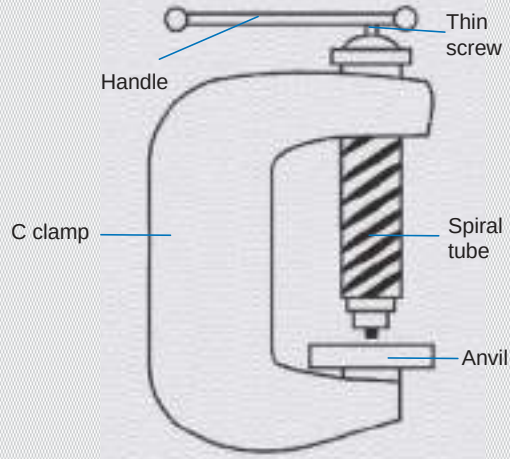

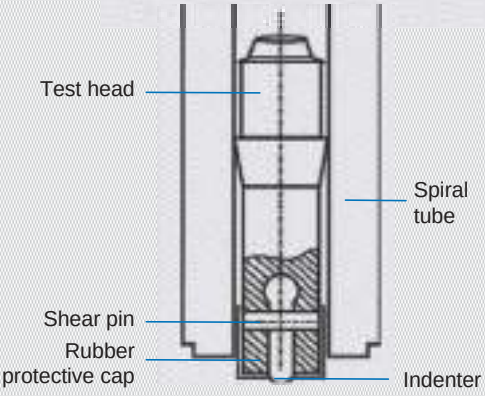

Hammer Impact Brinell hardness tester

HBC

Product Introduction

- Hammer Impact Brinell hardness tester HBC is applied at workshops and large workpiece and the measurement departments for determining the Brinell hardness tester of the ferrous and non-ferrous metals and tensile strength of steel.
- The test condition meets the requirement of JJG411.

Specifications

Measuring Range	450 HBS
Steel Ball Diameter	Φ10mm
Dimensions	Φ25*110mm
Weight	0.5kg

Hammer Impact Brinell hardness tester

HBX-0.5

Product Introduction

- It can test the Brinell hardness value of ferrous and non-ferrous metals, whose modulus of elasticity is approximately equal to 2x100000MP. Accuracy is in accordance with GB/P231.2, ISO6506-2, United States ASTM10.
- It is suitable for industries such as metallurgy, machinery factories ofvarious sizes of metal parts and metal materials.

Specifications

Measuring Range	100-400 HBS
Measuring Range	4.9J
Dimensions	Φ55*370mm
Weight	3.3kg

Brinell Analogue Measuring Microscope

Product Application

- Accurately measure the diameter of indentation in Brinell hardness testing ;
- Reading microscope can measure the width and length of grooves, slots, keyslot, dents, etc.
- It can test metal surface quality, density, specimen at the field, and so on.

Specifications

Model/ Specifications	Magnification	Effective field of view (mm)	Dimension	Weight
JC10	20X	Φ6	(70*50*155)mm	0.5kg
JC5	40X	Φ3	(70*50*187)mm	0.6kg

Portable Webster Durometer

Product Introduction

- A portable instrument which can perform on-site hardness test on aluminum alloys. The test result can be got with only a simple clamp. It is convenient. efficient and reliable.
- Webster hardness tester is the preferred instrument for testing aluminum alloys mechanical performance ins accordance with American standard ASTM B647.
- Used for quick test the hardness of aluminium profiles, tubings ,sheets, accessories and other soft metal. Especially suitable for quick, non-destructive on-site 100% final products qualification test.
- Webster hardness tester can be also used for testing hardness of copper, brass and soft steel.

W-20(#862-113)

W-20a(#862-123)

W-20b(#862-133)

Product Features

- Indenter: Re-engineerred with advanced material and new production technology manufactured, higher hardness, long service life, good interchangeability.
- Indicator Hand: high strength indicator hard, less likely to be bent by long-term using or misoperation.
- Dial Glass: High strength, high toughness, uneasy to be broken or scratched.
- Handle: Forged aluminum alloy handle with fine anodized finishing, high resistance to abraision and stain.
- Hardness Blocks: Tested by standard rockwell hardness tester, the hardness block are attached with test report.
- Stability: Stable full scale point, stable calibration point, indicator never glides.
- Conversion: Results can be converted to Vickers, Rockwell and Brinell.

Product Application

- W-20: the most popular model, used to test normal aluminum profiles.
- W-20a: used to test aluminum profiles with thickness within 13mm.
- W-20b: used to test aluminum tubings with inner diameter over 6mm.
- W-B75: used to test brass tubings and brass sheets.
- W-BB75: used to test copper tubings and copper sheets.
- W-B92: used to test soft stainless steel sheets, cold-rolled steel, etc.

W-20 W-B75/W-BB75 W-B92

Specifications

Model	W-20	W-20A	W-20B	W-B75	W-B75B	W-BB75	W-BB75B	W-B92
Code#	862-113	862-123	862-133	862-143	862-153	862-163	862-173	862-183
Measuring Scope	0~20HW							
Indication Error	0.5HW(5~17HW)							
Repeatability Error	0.5HW(5~17HW)							
Hardness Range	25~110HRE; 58~131HRV			63~105HRF		18~100HRE		50~92HRB
Application	Aluminum alloy			Brass		Copper		Stainless Steel Trips

Product Introduction

BD-1 Barcol Impressor is mainly applied to test aluminum and aluminum alloys, It is suitable to test pure aluminum, aluminum alloys ,thick pieces of aluminum sheets, thick pieces, bars and assembled aluminum alloys parts(e.g.aluminum alloy doors, windows and ladders).

- BD-1 Barcol Impressor is also used to test fiber reinforced plastics and hard plastics.
- BD-1Barcaol Impressor complies with ASTM B648 test Method for Indentation Hardness of Aluminum Alloys by means of a Barcol Impressor.
- BD-1 Barcol Impressor is used to test soft plastics, lead, tin and other soft metals.

Product Features

- Easy to Use: Single hand operation; easy to use; high efficiency; able to make test at any site.
- High sensitivity: Barcol Impressor has 100 graduations. Its sensitivity is much higher than the webster hardness tester.
- Wide Testing Range: Used to test from very soft pure aluminum to very hard aluminum alloys.
- Less Thickness Requirement : It can test on any workpieces with thickness greater than 0.8mm.
- No Supporting Requited: It can test from only one side of the workpiece. It is unnecessary to move or support the workpiece. It is used to test very large and thick worpieces and assembly parts.
- Easy Conversion:The test results can be converted to HB,HRC,HV and HBW easily through the conversion table.
- High Quality Indenter:The indenter has very high hardness ,long service life and good interchangeablility.

Specifications

Commodity	Portable Barcol Durometer			
Model	BD-934	BD-934A	BD-935	BD-936
Code#	872-113	872-113A	872-123	872-133
Indenter	26°panhead cone, head face diameter 0.176mm			
Measuring Range	0~100HBa(equivalent to 25~145HBW)			
Resolution	0.5HBa			
Indication Error	hardness range 42~48HBa, ±2HBa ; hardness range 81~88HBa ±1HBa			
Repeatability Error	hardness range 42~48HBa, ±2HBa; hardness range 81~88HBa ±1HBa			
Weight	0.5kg			

Product Application

Type	Equivalent Hardness Range	Application Materials	Model Test Piece
BD-934	25-150 HB	Aluminum, aluminum alloy.reinforced plastics (FRP.SMC. BMC, somersetting laminate, etc.) and hard plastic.	Aluminum plates, thick wall aluminum, aluminum wheels, aluminum alloy castings, etc.Aluminum doors and windows after assembly,curtain wall ladder, FRP sanitary ware products, hull, storage tank , artificial marble slab, etc.
BD-934A	25-150 HB	Aluminum, aluminum alloy and fiberglass.	Aluminum rods, ladders and other narrow face or cylinder products.
BD-935	68-90 HSD	Soft plastic, hard rubper and soft metal	Acrylic board and SAN resin.
BD-936	52-90 HSD	Super soft material	Lead, leather, plastic flooring and rubber.

Portable Barcol Durometer

Product Features

- It is characterized in that provided with a balance positioning, a digital display of hardness value, and a non disassembly calibration and adjusting.
- It is with good stability, convenient calibration, and high accuracy of detection.
- Small in size, portable. Single hand operation, easy to use. Can be used in any occasion as long as the hand can reach.
- Wide test range, can test from very soft pure aluminum to a particularly hard aluminum alloy. effective test range equivalent to the Brinell Hardness of 25~150HB.
- No need to support. The hardness tester is only tested on one side of the sample without support.
- Can be used for measuring not only Barcol Hardness, but also Brinell Hardness(HB), Vickers Hardness (HV), Webster Hardness (HW), Rockwell Hardness (HRB/HRE/HRF/HRH).
- With the maximum hold function, hold the maximum hardness value during measurement.
- With the function of calculating the average value, and the average value of the 29 sets of data are calculated at most.
- Provide Bluetooth data output choice.

Product Application

It is mainly used in aluminum processing industry. Also, it can be used for glass steel industry.

Specifications

Commodity	Barcol Impressor
Model	DB-934Plus
Code#	872-153
Range	0~100Hba, Amount to 25~150HBW
Resolution	0.1HBa
Indication Error	81~88HBa ±1HBa
	42~48HBa ±2HBa
Repeatability Error	81~88HBa ±1.5HBa
	42~48HBa ±2.5HBa
Brinell Hardness	√
Vickers Hardness	√
Wenster Hardness	√
Rockwell hardness	√
Maximum Hold	√
Average Calculation	√
Operating Condition	Temperature: 0~50ºC Humidity: <80%RH
Power Supply	2x1.5V AAA(UM-4)Battery
Dimensions	(170*63*82)mm
Weight(Not Including Batteries)	390g

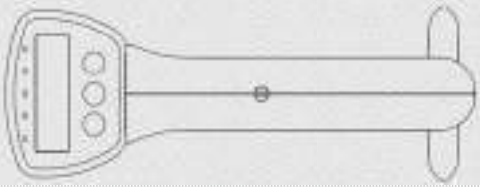

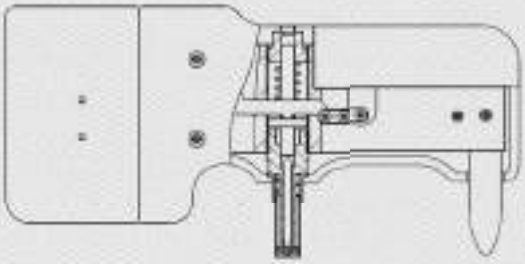

Product Introduction

- The hardness blocks are mainly applicable to test the accuracy and calibrate the different hardness testers.
- Conform to standard: ASTM & ISO & JB/T.
- Calibration certificate from Chinese Metrology Bureau is optional available.

Specifications

Commodity	Specification	Code #	Uniformity	Roughness	Dimension(mm)	Standard
HRA Rockwell Hardness Block	28-88HRA	811-611	±0.5HRA	Ra=0.02um	Φ65x16	ASTM & ISO & JB/T
HRB Rockwell Hardness Block	88-100HRB	811-621	±0.5HRB	Ra=0.02um	Φ65x16	ASTM & ISO & JB/T
HRC Rockwell Hardness Block	25-65HRC	811-631	±0.5HRC	Ra=0.02um	Φ65x16	ASTM & ISO & JB/T
Superficial Rockwell Hardness Block	(79-91) HR15N	811-661N	±0.5HR	±0.5HR	Φ60x10	ASTM & ISO & JB/T
	(42-80) HR30N	811-671N				
	(20-70) HR45N	811-681N				
	(88-93) HR15T	811-661T				
	(70-82) HR30T	811-671T				
	(55-72) HE45T	811-681T				
Brinell Hardness Block	(150-600) HBW 10/3000	831-601	±2%HB	Ra=0.28um	Φ90x17	ASTM & ISO & JB/T
	(150-600) HBW 5/750	831-611				
	(150-600) HBW 2.5/187.5	831-621	±2%HB	Ra=0.28um	Φ60x10	ASTM & ISO & JB/T
	(75-125) HBW 10/1000	831-631	±2%HB	Ra=0.28um	Φ90x17	ASTM & ISO & JB/T
	(75-125) HBW 5/250	831-641	±3%HB	Ra=0.28um	Φ64x12	ASTM & ISO & JB/T
	(75-125) HBW 2.5/62.5	831-651	±3%HB	Ra=0.28um	Φ60x10	ASTM & ISO & JB/T
Vickers Hardness Block	(150-750)HV1	821-601	±3%HV	Ra=0.02um	Φ25x7	ASTM & ISO & JB/T
	(150-750)HV5	821-611	±3%HV	Ra=0.02um	Φ60x10	ASTM & ISO & JB/T
	(150-750)HV10	821-621	±2%HV	Ra=0.02um	Φ60x10	ASTM & ISO & JB/T
	(150-750)HV30	821-631				ASTM & ISO & JB/T
Micro Vickers Hardness Block	(200-300)HV0.05	823-671	±3%HV	Ra=0.02um	Φ25x5	ASTM & ISO & JB/T
	(200-300)HV0.1	823-661				
	(400-500)HV0.1	823-651				
	(400-500)HV 0.2	823-641				
	(700-800)HV0.2	823-631				
	(700-800)HV0.5	823-621				
	(700-800)HV1	823-611				
Leeb Hardness Block	(490-830)HLD	852-611	±5HLD	Ra=0.03um	Φ90x55	ASTM & ISO & JB/T
	(460-630)HLG	852-621				
Ultrasonic Hardness Block	28-63HRC	882-611	±0.4HLG	Ra=0.03um	Φ90x16	ASTM & ISO & JB/T
	(300-800)HV1	882-621				
	(180-500)HV5	882-631				
	(300-800)HV5	882-641				
Portable Brinell Hardness Block	(150-500)HBW5/750	832-681	±2%	Ra=0.02um	12x12x150	ASTM & ISO & JB/T
	(150-500)HBW5/3000	832-691	±2%	Ra=0.02um	14x14x150	ASTM & ISO & JB/T
Shore Hardness Block	Shore A	842-611	±1H	Ra=0.02um	7PCS	ASTM & ISO & JB/T
	Shore D	842-621	±1H	Ra=0.02um	3PCS	ASTM & ISO & JB/T

Hardness Indenter

Product Introduction

- The diamond indenter is made by grinding high-quality natural/artificial diamond raw materials with a specified weight into a standard geometric shape with certain technical requirements, inlaying the material, grinding it into a standard geometric shape with certain technical requirements, and inlaying it into the top of a cone or square pyramid, named "diamond indenter" or "hardness tester indenter", is a special tool for hardness tester.
- The diamond Rockwell indenter is an important part of the hardness tester. It is mainly used in hardness testers to test the heat treatment hardness of mold steel and surface treatment layer hardness, as well as the standard hardness tester of the metrology department and the identification of material hardness.

Rockwell Hardness Indenter

Commodity	Code #	Commodity	Code #
1/8"Ball Indenter	811-431	1/4"Ball Indenter	811-451
Ø1/8"Steel Ball	811-441	Ø 1/4"Steel Ball	811-461
1/2"Ball Indenter	811-471	Ø1.588mm Ball Indenter	811-411
Ø 1/2" Steel Ball	811-481	Cone Diamond Indenter	811-401

Brinell Hardness Indenter

Commodity	Code #	Commodity	Code #
Ø10mm Ball Indenter	831-411	Ø5mm Ball Indenter	831-421
Ø2.5mm Ball Indenter	831-431	Ø1mm Ball Indenter	831-401

Micro Vickers Hardness Indenter

Commodity	Code #	Commodity	Code #
Indenter HV	821-401	Indenter HK	821-411

Support Customization

11952 Lindblade St.Culver City, CA 90230 (310) 736-1901
info@physicaltestsolutions.com www.physicaltestsolutions.com